Router Table • Box Joint Storage Chest • Old-Fashioned Clock

# Woodsmith®

Vol. 22 / No. 131

**Box Joints — They're Easy as 1-2-3**

**Make Your Own Heirloom Box Joint Storage Chest**

**Great Gift Project — A Handsome Clock You Can Build in a Weekend**

Build the Ultimate
## Router Table

www.woodsmith.com

# Woodsmith

No. 131 October, 2000

**Publisher** Donald B. Peschke
**Editor** Terry J. Strohman
**Associate Editors** Jon Garbison, Vincent Ancona
**Contributing Editor** Joel A. Hess
**Art Director** Todd Lambirth
**Senior Illustrators** David Kreyling, Dirk Ver Steeg, Harlan V. Clark
**Graphic Intern** Kara K. Blessing

**CREATIVE RESOURCES**
*Creative Director:* Ted Kralicek • *Project Developer:* Ken Munkel • *Sr. Project Designer:* Kent Welsh • *Shop Manager:* Steve Curtis • *Shop Craftsman:* Steve Johnson • *Senior Photographer:* Crayola England

**SPECIAL PUBLICATIONS**
*Executive Editor:* Douglas L. Hicks • *Senior Graphic Designer:* Chris Glowacki • *Assistant Editors:* Craig Ruegsegger, Joel A. Hess • *Graphic Designers:* Vu Nguyen, April Walker Janning, Stacey L.Krull • *Graphic Intern:* Heather Boots

**CIRCULATION**
*Subscriber Services Director:* Sandy Baum • *New Business Mgr.:* Todd Bierle • *Promotion Mgr.:* Rick Junkins • *Renewal Mgr.:* Paige Rogers • *Billing & Collections Mgr.:* Rebecca Cunningham • *Circ. Marketing Analyst:* Kris Schlemmer • *Assoc. Circ. Marketing Analyst:* Paula M. DeMatteis • *Asst. Subs. Mgr.:* Joy Krause • *Sr.Graphic Designers:* Mark Hayes, Robin Dowdell

**CORPORATE SERVICES**
*Director of Finance:* Mary R. Scheve • *Controller:* Robin Hutchinson • *Sr. Account.:* Laura Thomas • *Accts. Payable:* Mary J. Schultz • *Accts. Receivable:* Margo Petrus • *Production Dir.:* George Chmielarz • *Electronic Publishing Director:* Douglas M. Lidster • *Network Administrator:* Cris Schwanebeck • *Pre-press Image Specs.:* Troy A. Clark, Minniette Johnson • *Prod. Coordinator:* Noelle Carroll • *New Media Manager:* Gordon C. Gaippe • *Web Site Art Director:* Gene Pedersen • *Technology Analyst:* Carol Schoeppler • *Web Content Managers:* Terry Walker, David Briggs • *Web Prod.Specialist:* Adam Best • *H.R. Assistant:* Kirsten Koele • *Facilities Mgr.:* Julia Fish • *Admin. Assistant:* Sherri Ribbey • *Receptionist:* Jeanne Johnson • *Mail Room/Delivery:* Lou Webber

**WOODSMITH MAIL ORDER**
*Operations Dir.:* Bob Baker • *Customer Service Mgr.:* Jennie Enos • *Warehouse Supr.:* Nancy Johnson • *Buyer:* Linda Jones • *Tech. Service Rep:* Johnny Audette • *Admin. Assist.:* Nancy Downey • *Cust. Serv. Reps.:* Tammy Truckenbrod, Anna Cox, Deborah Rich, April Revell, Jeanette Rankin • *Warehouse:* Sylvia Carey, Dan Spidle, Sheryl Knox

**Woodsmith**® (ISSN 0164-4114) is published bimonthly (Feb., Apr., June, Aug., Oct., Dec.) by August Home Publishing Company, 2200 Grand, Des Moines, IA 50312.


**Woodsmith®** is a registered trademark of August Home Publishing.
**Copyright©** 2000 August Home Publishing Company. All rights reserved.


**Subscriptions:** Single copy: $4.95. One year subscription (6 issues), $21.94. (Canada/International add $10 per year, U.S. funds.)
**Periodicals Postage Paid** at Des Moines, IA and at additional offices. USPS/Perry-Judd's Heartland Division Automatable Poly.
**Postmaster:** Send change of address to *Woodsmith*, Box 37112, Boone, IA 50037-2112.
**Subscription Questions?** Write to *Woodsmith*, P.O. Box 842, Des Moines IA 50304-9961 or call 1-800-333-5075, 8:00 am to 5:00 pm, Central Time, weekdays. Or send an e-mail to: orders@woodsmith.com
**E-Mail:** woodsmith@woodsmith.com
**World Wide Web:** http://www.woodsmith.com

Printed in U.S.A.


EDITOR'S COLUMN

# SAWDUST

It's fall — the time of year when I get a chance to start spending more time in the shop. As usual, I'm always itching to get started on new projects. This year, at the top of my list was a brand new router table.

Now there's nothing wrong with my old router table. I've been using it for a number of years, and it has always seemed to get the job done. But to be honest, I thought it could use a few improvements.

At first, I considered buying a manufactured router table. However I couldn't find any single table that had all the features I was looking for. So I decided to build my own.

Taking a look at the front cover, it's easy to see that this new router table has a large, laminated worksurface with a lift-out insert plate that provides a quick way to change bits. It also features plenty of built-in storage and an accurate, shop-built fence.

But what sets this router table apart is something you *can't* see. I guess you could say it has a "split personality." Let me explain.

The router table is designed so it can be taken apart to make two separate cabinets. The upper cabinet can be lifted off the lower section. This way if you're working on a project away from the shop, you can take the upper part of the router table with you. As an option, the lower part can also be used as a tool stand.

There are also a few other details about the router table that are worth mentioning. For one thing the top features a unique metal track that can be adjusted to fit any miter gauge. What's different about this miter gauge slot is it also has a separate T-track that allows you to quickly attach a featherboard to the table.

The fence also has a couple of interesting features. It has two sliding faces so you can adjust the width of the bit opening. And once again, a metal T-track makes attaching a bit guard or featherboard a snap.

Even if you don't plan on building the router table in this issue, this T-track is worth a look. It's a great way to add a quick, adjustable mounting system to any shop jig or accessory.

As you can probably tell, I'm very excited about this new router table. And I hope you are too.

Terry

**NEW On the Web**

## Woodsmith Readers' Gallery

Visit other *Woodsmith* subscribers' workshops, and see photos of the projects they've built. It's all online in the new Readers' Gallery on the *Woodsmith* web site:
**www.Woodsmith.com**

We want you to be part of the Readers' Gallery! To submit photos of your favorite *Woodsmith* projects or views of your shop, follow the instructions you'll find at the gallery.

A LOOK INSIDE

# CONTENTS

## Features


**Router Table** ..... 6

*A two-part design makes this router table unique. The upper section can be carried to a job site while the lower section has plenty of room for storing your router accessories.*

**Router Table Fence** ..... 14

*A good fence is a must-have for any router table. This one features a postive-action clamping system as well as adjustable front faces. And it's reinforced with aluminum angle and T-track.*

**Box Joint Storage Chest** ..... 20

*With its rows of evenly-spaced box joints, this storage chest is sure to please. The drawers are sized so you can mix and match them in the case, creating your own distinctive look.*

**Box Joints** ..... 26

*Learn the secrets to making perfect box joints. With nothing more than a table saw, a dado blade, and a simple jig, you'll be turning out professional-looking joints in no time.*

**Box Joint Clock** ..... 30

*So you want to try making box joints, but you're not sure where to start? This little clock just might be the perfect choice. It doesn't require a huge investment of time or materials.*


## Departments


**Tips & Techniques** ..... 4
**Shop Notes** ..... 18
**Sources** ..... 35

***Router Table*** *page 6*

***Box Joint Storage Chest*** *page 20*

***Box Joint Clock*** *page 30*

# TIPS & TECHNIQUES

## Wine Rack Jig

I recently built a wine rack similar to the one that you featured along with the kitchen work center in issue No. 129. Since I don't own a band saw, I had to come up with a different way of making the crescent-shaped cutouts that hold the wine bottles, see photo.

Instead I use a 3½"-dia. hole saw in my drill press and a simple jig that attaches to the drill press table, see Fig. 1.

The jig helps me to line up the workpiece for consistent cuts. It's simply a large plywood base and a fence made from a short piece of 2x4 stock. I glued the fence to the base and then clamped the jig to the drill press table.

By centering the hole saw ½" from the edge of the fence, I can make the cutouts in the rack using a portion of the hole saw. Plus, the fence helps to keep the drill bit aligned while making the cut.

Just draw a centered line through the kerf and the base. Lay out the workpiece and hold it against the fence to make the semi-circles. Then clean the semi-circles up with a sanding drum if needed.

*David Hendrick*
*Salina, Kansas*

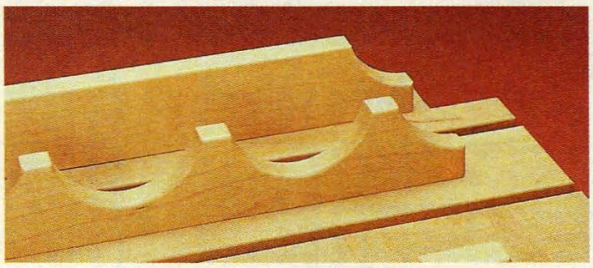

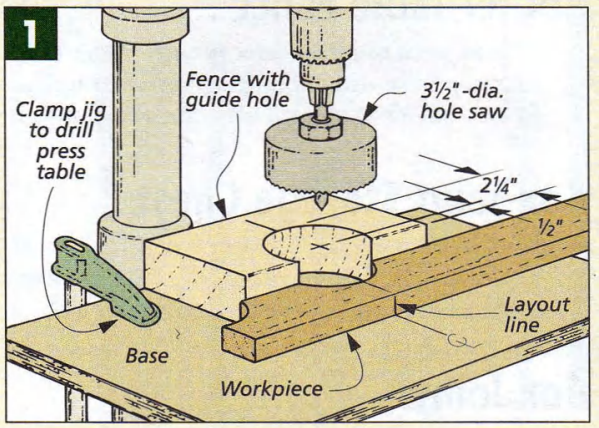


**FREE**
**Online Tips**

If you'd like even more woodworking tips, the solution is simple. Just visit us at our web site and sign up to receive a free tip via email every week.

www.woodsmith.com

## Body Filler Sanding Block

Sanding the profiles on cove moldings can be tricky. The problem is holding the sandpaper to the shape of the cove. To make this job easier, I make a custom sanding block using leftover body filler from my garage workshop, see photo.

I simply lay a piece of wax paper over the cove molding, pour in the body filler, and add a scrap of wood for a handle as shown at left. Once the filler dries, I use the block by attaching a piece of self-adhesive sandpaper to the curved face.

*Mark Vanderpool*
*Wichita, Kansas*

### QUICK TIP

## Lathe Window Shade

My lathe sits against the wall in my garage. Whenever I turn really wet wood or when finishing a turning on the lathe, the wall behind the lathe gets splattered. So I mounted a roll-down window shade above the lathe. I just pull down the shade to protect the wall.

*Ralph Spinney*
*Attleboro, Massachusetts*

## Hardware Magnet

I stuck a magnetic bar on the edge of the extension wing of my table saw. When I unscrew the auxiliary fence from my miter gauge, or remove hardware from a jig, I stick the hardware to the magnet. This way, I know right where it is when I need it again.

*Craig Ruegsegger*
*Altoona, Iowa*

## Dust Bag Zipper

Instead of having to remove the bag from my dust collector every time it gets full, I came up with a quicker method. I simply sewed a zipper into the bag. This way, I can just unzip the bag and empty it out while it's still connected to the dust collector.

*Bobby Hill*
*Columbus, Georgia*

## Turned Spindle Repair

Recently while turning an intricate spindle, my chisel caught the work piece and tore out a chunk of wood. Rather than discard the ruined turning, I came up with a simple technique to repair the damage.

To start with, I used a parting tool to turn down the damaged area to a consistent diameter, as shown in Figs. 1 and 1a.

Next, select a block of wood with similar color and grain as the spindle that's being repaired. The length of the block should match the width of the area that was turned down on the spindle. A hole is drilled in the center of the block to match the diameter of the area to be repaired.

The block is then cut in half on a band saw (or split with a chisel) and glued in place around the spindle, as shown in Figs. 2 and 2a. Once the glue dries, the spindle can be re-turned correctly.

If you take the time to carefully match the grain of the block with the spindle, the repair will be hardly noticeable.

*David McNish*
*Pinehurst, North Carolina*

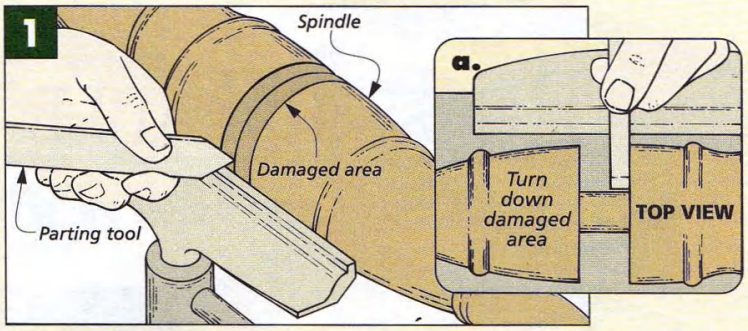


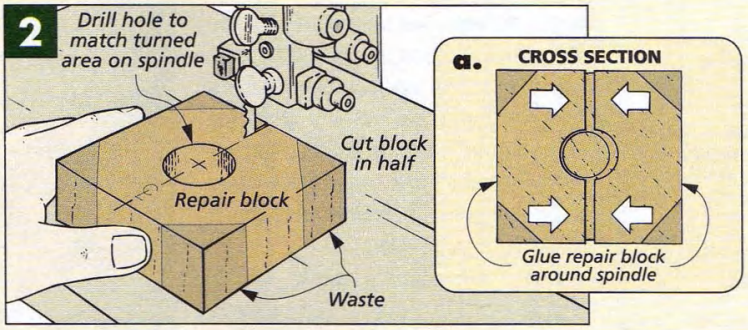


## Flush Cut Guard

I like to give my projects a finished look by plugging exposed screwheads. But sometimes when I'm cutting the plugs flush, I nick the workpiece with my back saw, leaving a scratch that's hard to sand out.

So I've come up with a little trick to avoid this. Now when trimming the plugs, I use a scrap piece of laminate as a guard to protect the workpiece (Fig. 1).

The scrap piece isn't very large. (Mine's 4" x 8".) I simply drill a hole in the guard slightly larger than the size of the dowel used for the plug. Then I place the guard over the workpiece and saw off the plug flush with the laminate.

After removing the laminate, the plug will be standing a little proud of the surface. But this is easy to fix. Just lightly sand down the end of the plug so it's flush with the surface of your project, as shown in Fig. 2.

*Federico Vallenas*
*St. Huberth, Quebec*

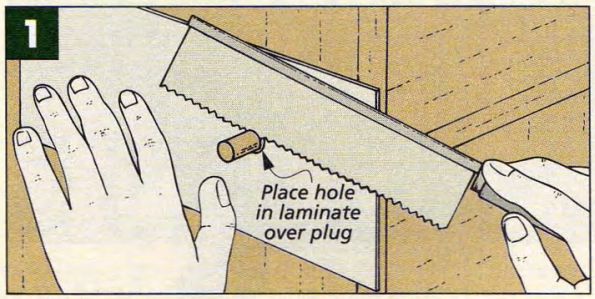


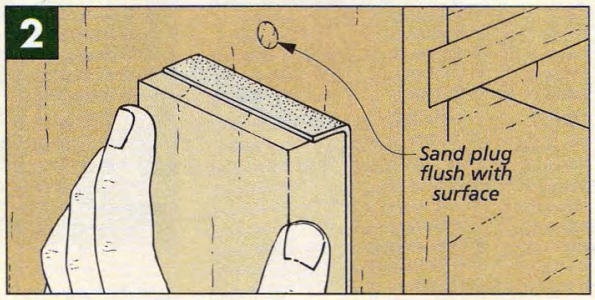


### SUBMIT YOUR TIPS

If you have an original shop tip, we would like to hear from you and consider publishing your tip in one or more of our publications. Just write down your tip and mail it to: *Woodsmith,* Tips and Techniques, 2200 Grand Avenue, Des Moines, Iowa 50312. Please include your name, address, and daytime phone number in case we have any questions. If you would like, FAX it to us at 515-282-6741 or send us an email message at: woodsmith@woodsmith.com. We will pay up to $200 if we publish your tip.

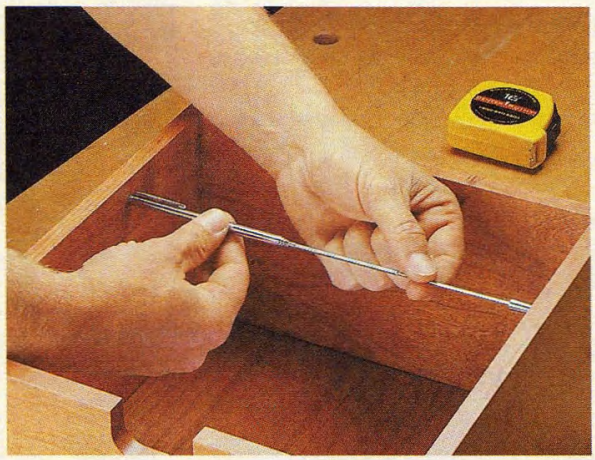

◄ *To measure the inside dimensions of cabinets and drawers, I simply extend a telescoping pointer (found at most office supply stores) and transfer the measurements to a tape measure or rule.*

*Paul Fertell*
*Longmont, Colorado*

# ROUTER TABLE

*You can't buy a router table this good. But you can build one.*

I call this my "Jekyll and Hyde" router table. Not because it's a monster, but because it has a dual personality. At first glance, it looks like a fairly ordinary, floor-standing router table. But walk over to it, lift up the top section, and all of a sudden you have a smaller, portable router table that's ready to go anywhere.

Even though it's made to be portable, this isn't a lightweight router table. It's got a full-size top and just about all the features you could want in a router table (see the box below). Plus to top it off, we've included a shop-built fence which is fully adjustable and includes a guard and dust collection port. For more on this, turn to page 14.

## Check out these features:

- ► ***Portability*** *– A two-piece design allows you to simply lift off the upper section and carry the router table to your jobsite.*
- ► ***Dual Track*** *– Miter gauge slot includes a T-track for attaching featherboards.*
- ► ***Lift-out Insert*** *– An easily removable insert plate means quick bit changes.*
- ► ***External Switch*** *– No more fumbling underneath the table trying to find the router switch.*
- ► ***Storage*** *– A drawer and large storage compartment in the stand offer plenty of space for bits, routers, and accessories.*
- ► ***Fence*** *– Sturdy fence equipped with adjustable faces, bit guard and hood for dust collection.*
- ► ***Leg Levelers*** *- Easily adjustable, heavy-duty levelers make this router table rock solid.*

▲ *The portable upper section of the router table lifts straight off the stand. It can be placed on a bench or carried to a remote jobsite and then returned to the stand.*

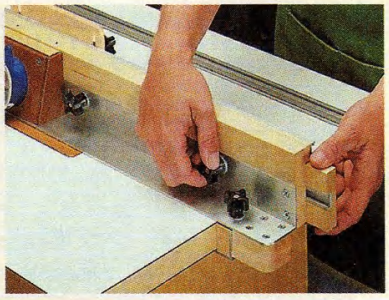

▲ *You can make your router table even more versatile by adding this shop-built fence. It features adjustable sliding faces to accommodate different size router bits.*

# Construction Details

***OVERALL DIMENSIONS:***
***30"W x 23"D x 37 15/16"H***

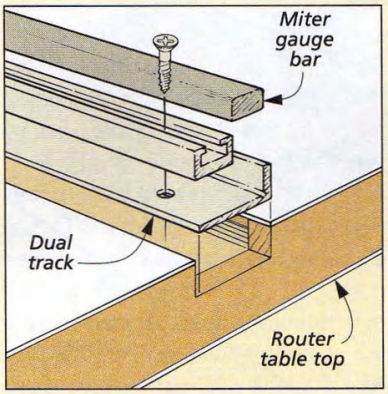


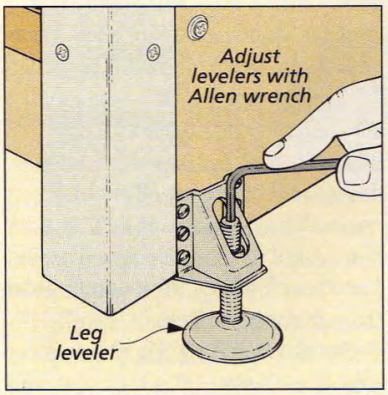


Adjustable fence (see article on page 14)

Laminated top

Dual track miter gauge slot includes T-track for attaching featherboard

Removable insert plate

Figure-8 fastener

Port for dust collection

Doors provide access to router

Exterior switch controls outlet inside cabinet for router

Door pull

Drawer rides on full-extension metal slides

Continuous hinge

False front

**NOTE:** Two-piece design allows you to lift router table off stand for portability

**NOTE:** Drawer and storage compartment in stand provide plenty of room for router accessories

**NOTE:** Cabinet and stand are constructed out of 3/4" maple plywood

Hardwood edging covers all exposed plywood edges

Aluminum angle reinforces corners of stand

Leg leveler

**CROSS SECTION**

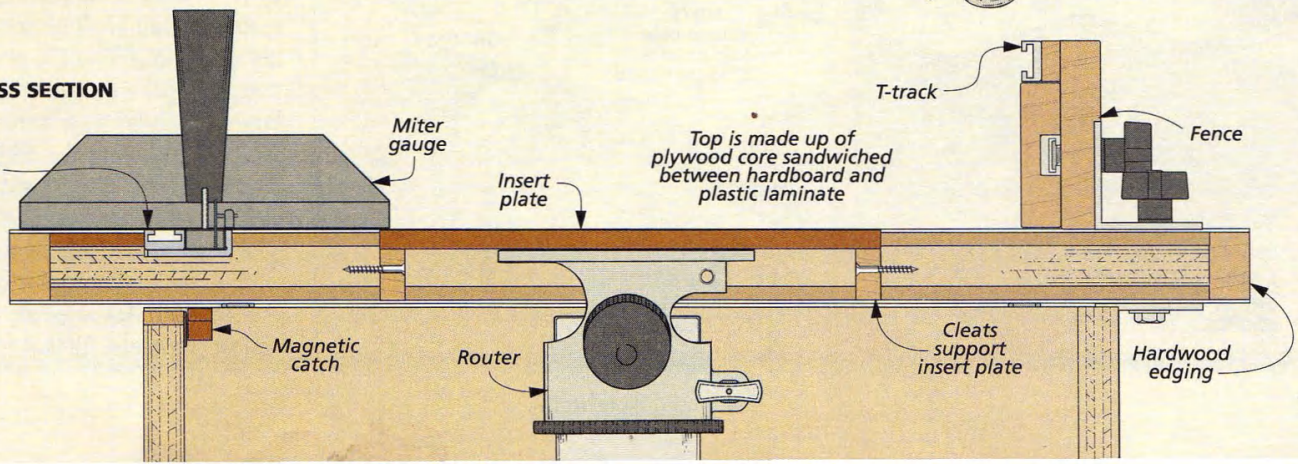

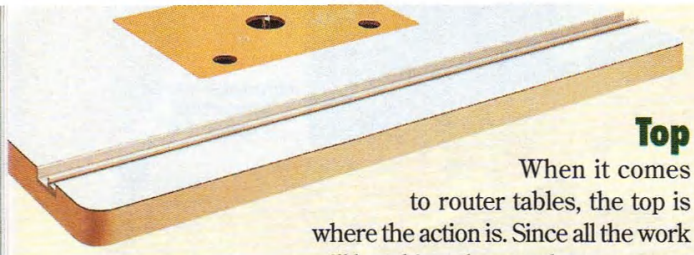

## Top

When it comes to router tables, the top is where the action is. Since all the work will be taking place on the top, we put a lot of thought into the design of this part of the router table.

**FLAT TOP.** First and foremost, the top of a router table needs to be flat and smooth — and stay that way. If it's not, you'll have a hard time routing consistent profiles, grooves, or dadoes. Since solid wood may warp, I used plywood and two layers of hardboard to make the top. By laminating these materials together, you end up with a table that's flat and stable. Then to provide a smooth, durable surface, plastic laminate is added to each side of the top. You can see what I'm talking about by taking a look at Fig. 1.

To make the top, start by cutting the plywood *top panel (A)* to finished size, as shown in Fig. 2. Then cut the two oversized hardboard *top skins (B)*. (I made my hardboard skins about 1" wider and longer than the plywood top panel.) After these skins are glued to the plywood with contact cement, they are trimmed flush with a router and flush trim bit (Fig. 2a).

Before adding the plastic laminate, I added some hardwood edging to the top. The edging not only covers the exposed plywood and hardboard edges, it protects them from damage as well.

**EDGING.** Looking at Fig. 3, you'll see that the *edging (C, D)* is just four pieces of hardwood that are mitered and glued around the edges of the top. I made the edging slightly wider than the thickness of the top. Then after it was glued in place, I planed it down flush with the surfaces of the top using a hand plane. (You could also sand the edging flush.) With the edging applied, I rounded the corners with a belt sander, like you see in Fig. 3a.

**LAMINATE.** I applied laminate to both faces of the top for a good reason. It helps to keep the moisture level the same on both faces of the top, thereby preventing the top from warping.

As you can see in Fig. 4, there's not much to adding the plastic laminate. It's just a matter of gluing the laminate down with contact adhesive and trimming the edges with a flush trim bit. A file or sanding block can be used to knock down the sharp edges of the laminate that are left behind by the flush trim bit.

**INSERT PLATE.** At this point, the top is almost complete. All that remains to

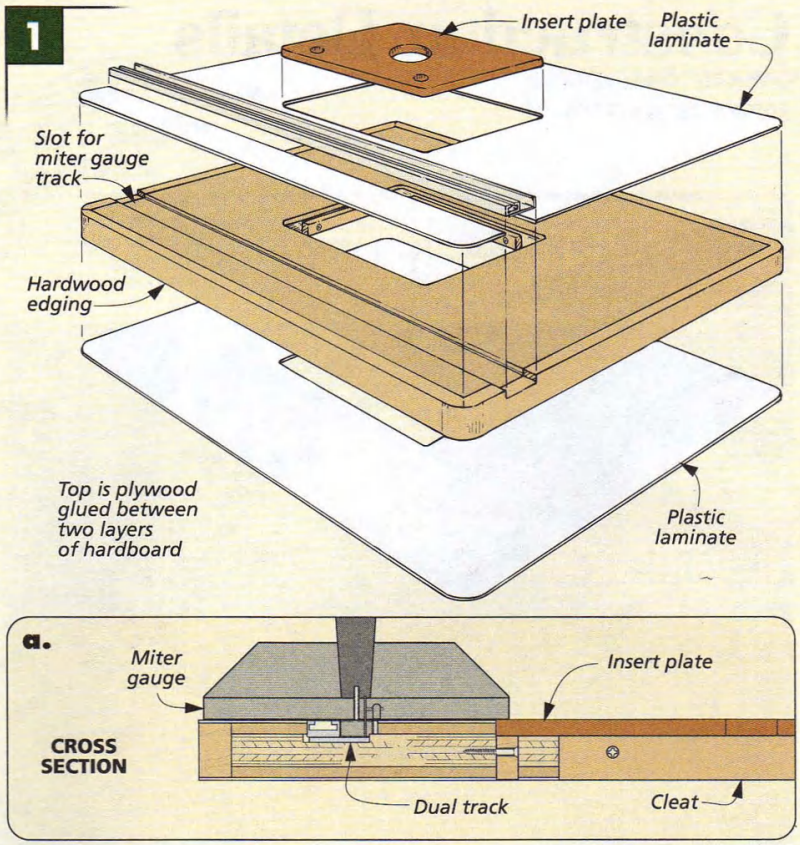


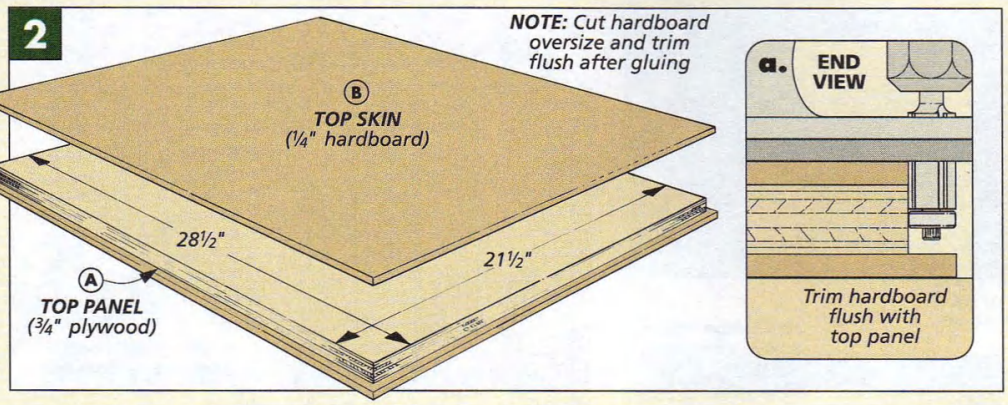


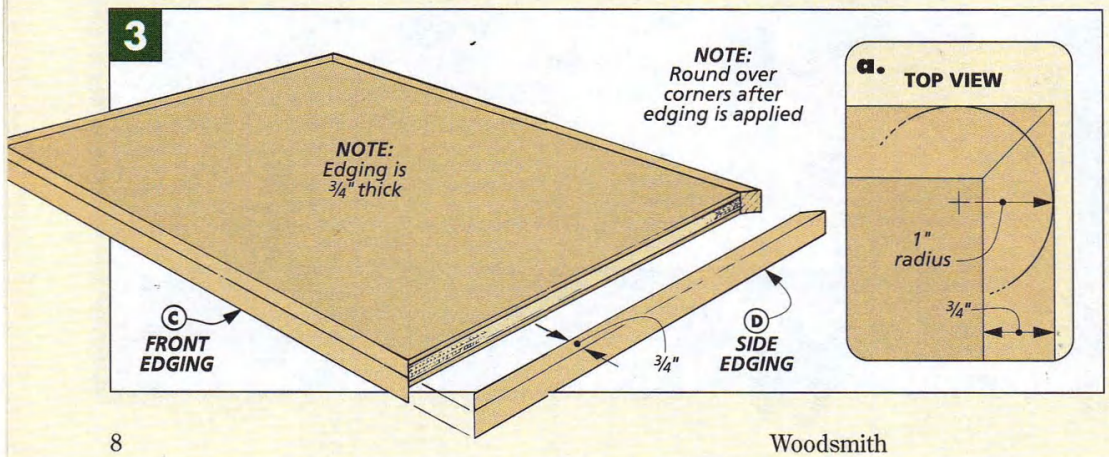

be added is an insert and a slot for a miter gauge. I decided to use an insert plate that's made out of *phenolic* (a hard, dense plastic). The nice thing about this plate is that it lifts right out along with the router so you can change bits easily. Shop Note: If you plan on using a plunge router with this table, you may have to use a larger insert plate.

In Fig. 5, you can see that the insert plate fits into a simple opening. (Turn to page 19 for more information on making this opening.) Hardwood *cleats (E, F)* are screwed to the sides of the opening and support the insert plate so it's flush with the top (Fig. 5a).

**MITER GAUGE SLOT.** The miter gauge slot I used for this router table is made up of two separate aluminum extrusions — an L-shaped piece and a T-track — take a look at Fig. 6a. Together, these parts form a slot for the miter gauge. And the T-track makes it easy to attach a featherboard using a couple of knobs and toilet flange bolts.

*Editor's Note:* This track system is a product called *Dual Track* that has been specially manufactured for *Woodsmith*. It's available as part of a hardware kit for the router table, refer to Sources on page 35.

Before you can cut the groove for the dual track, you'll need to assemble the two track pieces. Using your miter gauge as a spacer, glue the T-track to the L-shaped piece with instant glue. (Note: A sheet of paper slipped around the bar of your miter gauge will help to create a perfect sliding fit.) Then a dado blade can be used to cut a groove in the top for the assembled track pieces. As you can see in Fig. 6, this groove matches the width and thickness of the track.

Once the groove is cut, the two pieces of track are just screwed in place, like you see in Fig. 6a.

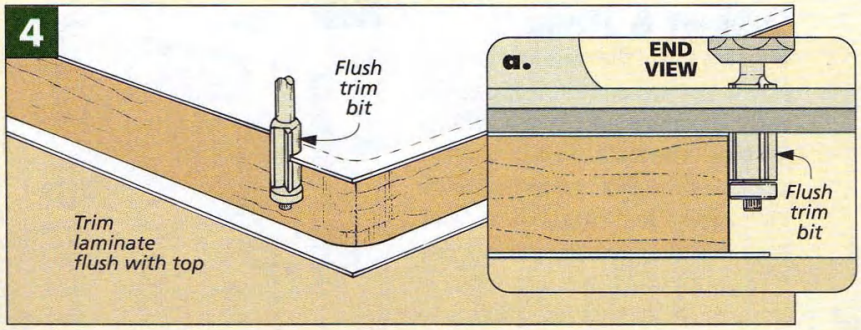


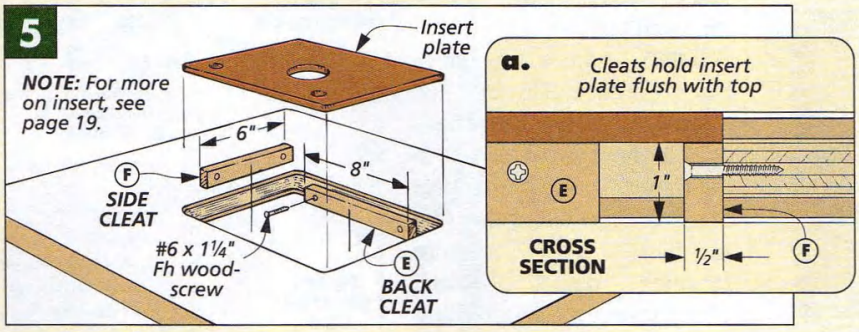


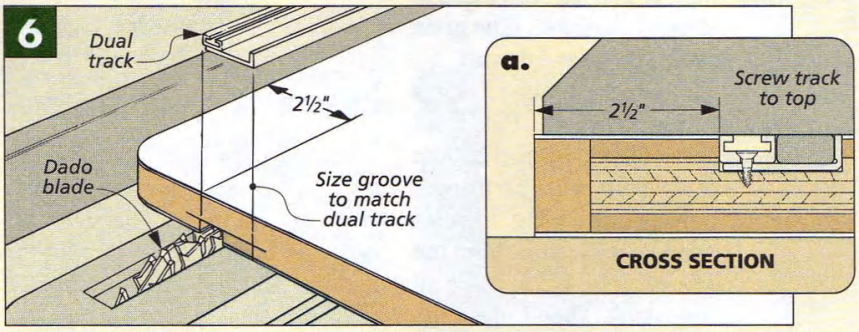


## MAKING IT STICK

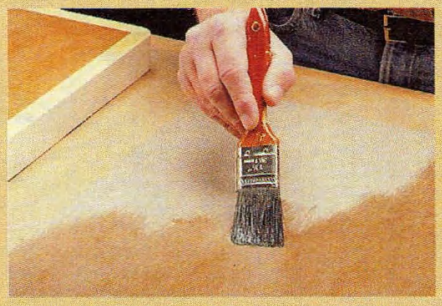

*Brush the contact adhesive onto* **both** *surfaces that you wish to join. After the first coat dries, apply a second coat and let it dry also. The adhesive will look glossy and won't transfer to your finger when dry.*

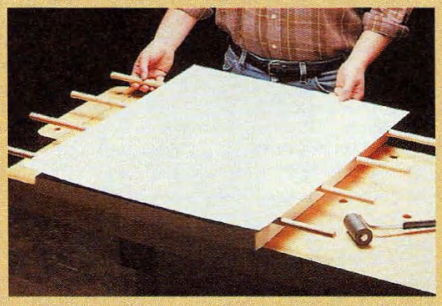

*Since contact adhesive grips on contact, you want to avoid letting the laminate touch the router table top before it's positioned. To do this, lay dowels across the top and center the laminate over the top.*

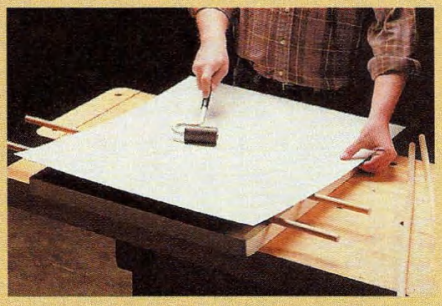

*Starting at one end, begin removing the dowels, rolling the laminate down as you go. The trick is to use as much pressure as possible to ensure a good bond. This is especially important around the edges.*

## Cabinet & Stand

With the top of the router table completed, you can start working on the base. There are actually two parts to the base. The table top is fastened to a small *cabinet* that houses the router. This cabinet in turn sits on a *stand*. With this arrangement, you can easily lift off the upper section of the router table and take it with you to a jobsite while leaving the stand behind.

**CABINET.** As you can see in Fig. 7, the cabinet is really just a small plywood box that's open in the front for access to the router. To start with, I cut the two *sides (G)*, *back (H)* and *bottom (I)* to size from ¾"-thick maple plywood. When laying out and cutting these pieces, pay attention to the grain direction. (The grain should run up and down.)

To hide the exposed edges of the plywood, the front edges of the sides and bottom are covered with hardwood. To make this edging, I simply ripped ¼"-wide strips from the edge of a ¾"-thick piece of maple stock. Then I glued the *edging (J)* to the front edges of the sides and bottom and trimmed it flush with a router.

The cabinet is held together with glue and screws. But as you can see in Fig. 7b, I used rabbets to increase the glue surface and keep the pieces aligned during assembly.

### Electrical

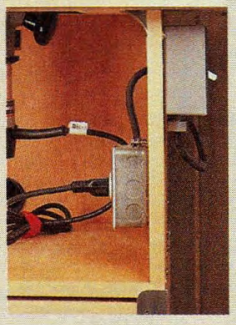

- (1) Handy Box
- (1) Single 15 Amp., 120 Volt Receptacle
- (1) Single Receptacle Box Cover
- (1) Cable Connector
- (1) Exterior Receptacle Box
- (1) 15 Amp., 120 Volt Switch
- (2) Water-Tight Cable Connectors
- (1) Switch Plate
- (1) 14-3 Electrical Cord (8 ft.)
- (1) 15 Amp., 120 Volt Plug (grounded)
- (1) Wire Nut Connector

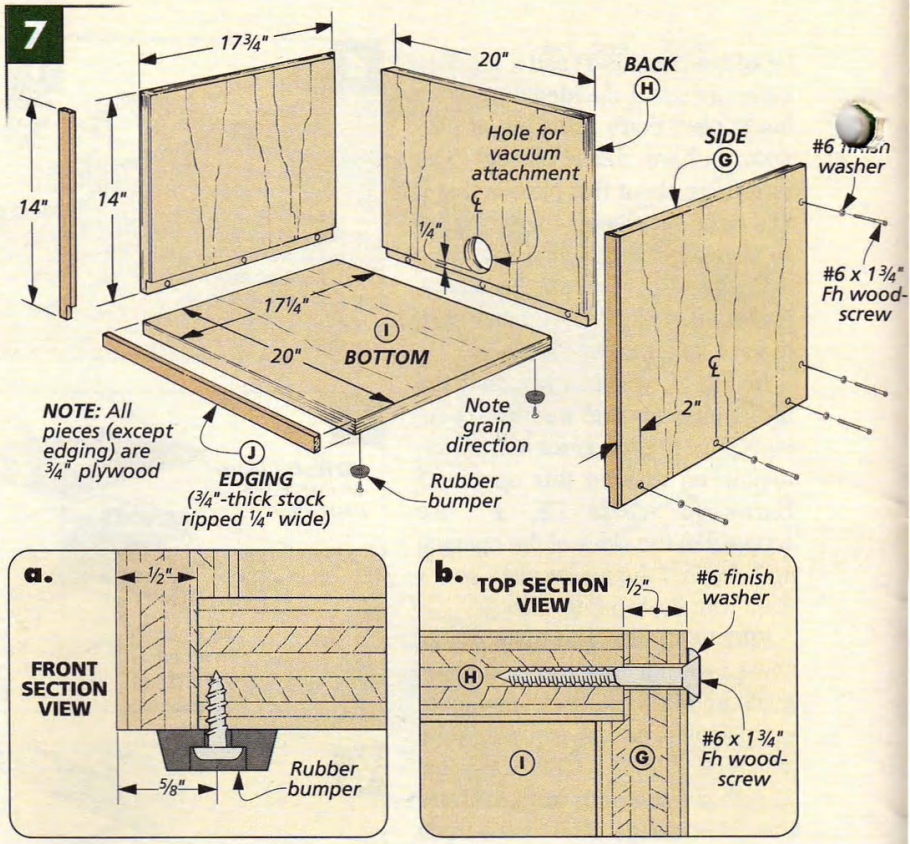


I used a dado blade to cut the rabbets with an auxiliary fence clamped to my rip fence. The sides are rabbeted to hold the back and the bottom. And the back is rabbeted along one edge to hold the bottom.

Before assembling the cabinet, I drilled a large hole in the back for a shop vacuum (Fig. 7). Hooking the router table up to a shop vacuum not only keeps the inside of the cabinet clean by removing sawdust and chips, it also pulls air across the router, allowing it to run cooler.

Once this hole is drilled, you can glue up the cabinet. While the glue is setting up, drill pilot holes and install the screws and finish washers on the sides and back of the cabinet. When these are in place, you can remove the clamps.

**DOORS.** To help contain the dust and tone down the high-pitched scream of the router, I added doors to the front of the cabinet. Each door is made up of a plywood *door panel (K)* with hardwood edging on three sides, as shown in Fig. 8. The

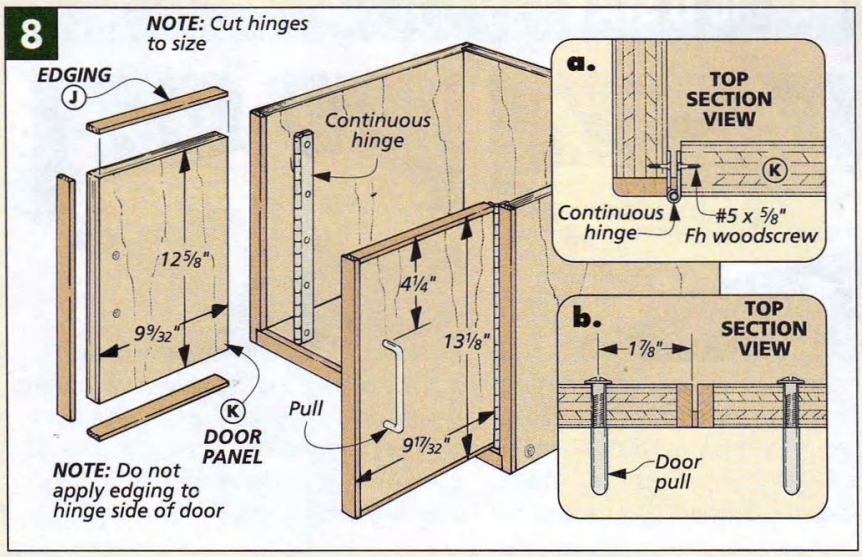


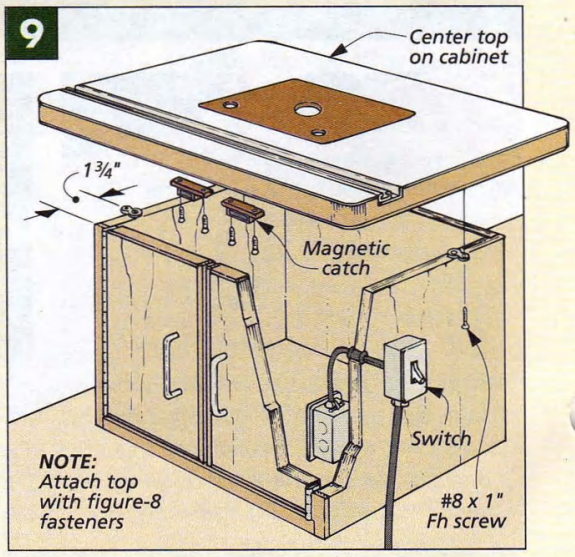

doors are then attached to the cabinet with continuous (piano) hinges.

**HARDWARE.** To complete the cabinet, all that's needed is to add the remaining hardware. First, a pull is attached to the front of each door. Then a couple of magnetic catches are mounted inside the cabinet and to the back of the doors. Finally, four rubber bumper feet are fastened to the bottom of the cabinet to prevent the router table from shifting around during use (Fig. 7a). Once this is done, you can attach the top to the cabinet using Figure-8 fasteners (Fig. 9).

**SWITCH.** To avoid having to fumble around under the table for the router switch, I mounted an outlet on the *inside* of the cabinet that is controlled by a switch on the *outside* of the cabinet (Fig. 9). Safety Note: Wiring the outlet and switch is not difficult, but if you aren't familiar with basic wiring principles you should seek the advice of a licensed electrician.

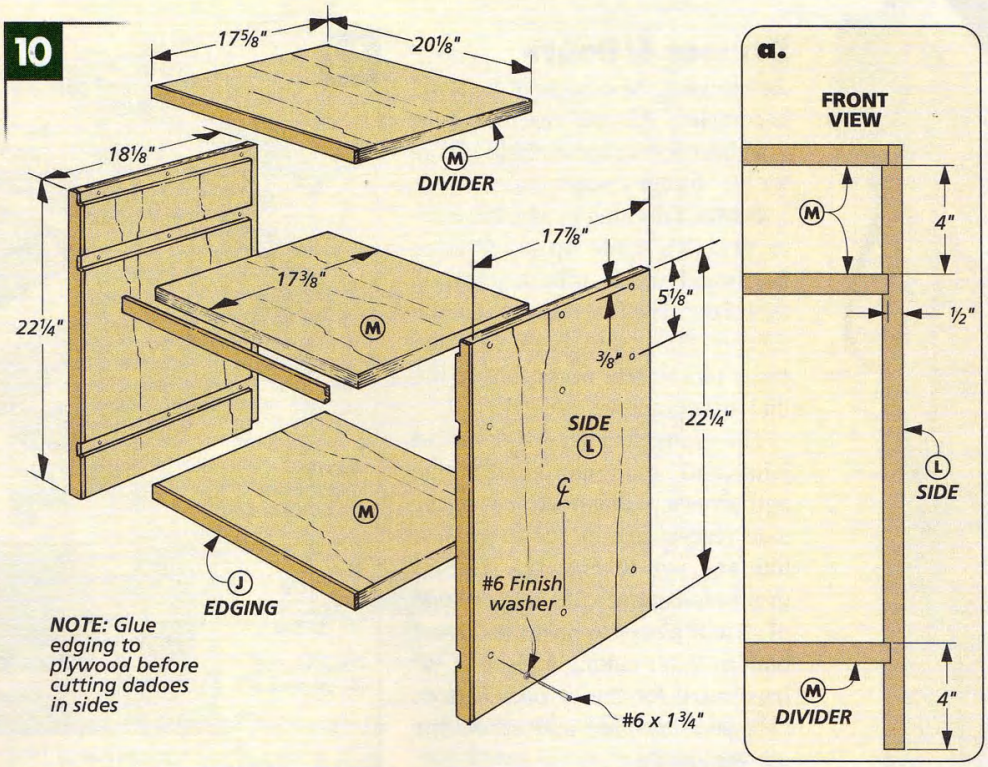


## STAND

Looking at Fig. 10, you can see that the stand is also a plywood box that's assembled with rabbets, glue and screws. The main difference is that the stand contains a drawer as well as a storage area.

Building the stand is pretty much like making the cabinet. Start by cutting the *sides (L)* and three *dividers (M)* according to the dimensions in Fig. 10. After adding edging to the front of these pieces, you can cut the rabbets and dadoes that hold them together. Then the sides and dividers can be glued and screwed together.

**BACK & TOE KICK.** The *back (N)* is being added in Fig. 11. It is also cut from ¾" plywood and has dadoes and a rabbet cut in it to fit over the dividers. The *toe kick (O)* is just a small piece of plywood that is glued and screwed in place.

**SPACERS.** Since the corners of the stand will be covered with aluminum angle, I added some *spacer blocks (P, Q, R, S)* to the stand. These provide a place for mounting the aluminum angle as well as the drawer and door hardware. They're just ¾"-thick pieces of hardwood that are glued to the front and back edges of the sides (Fig. 11). Once they're in place, you're ready to make the drawer and doors.

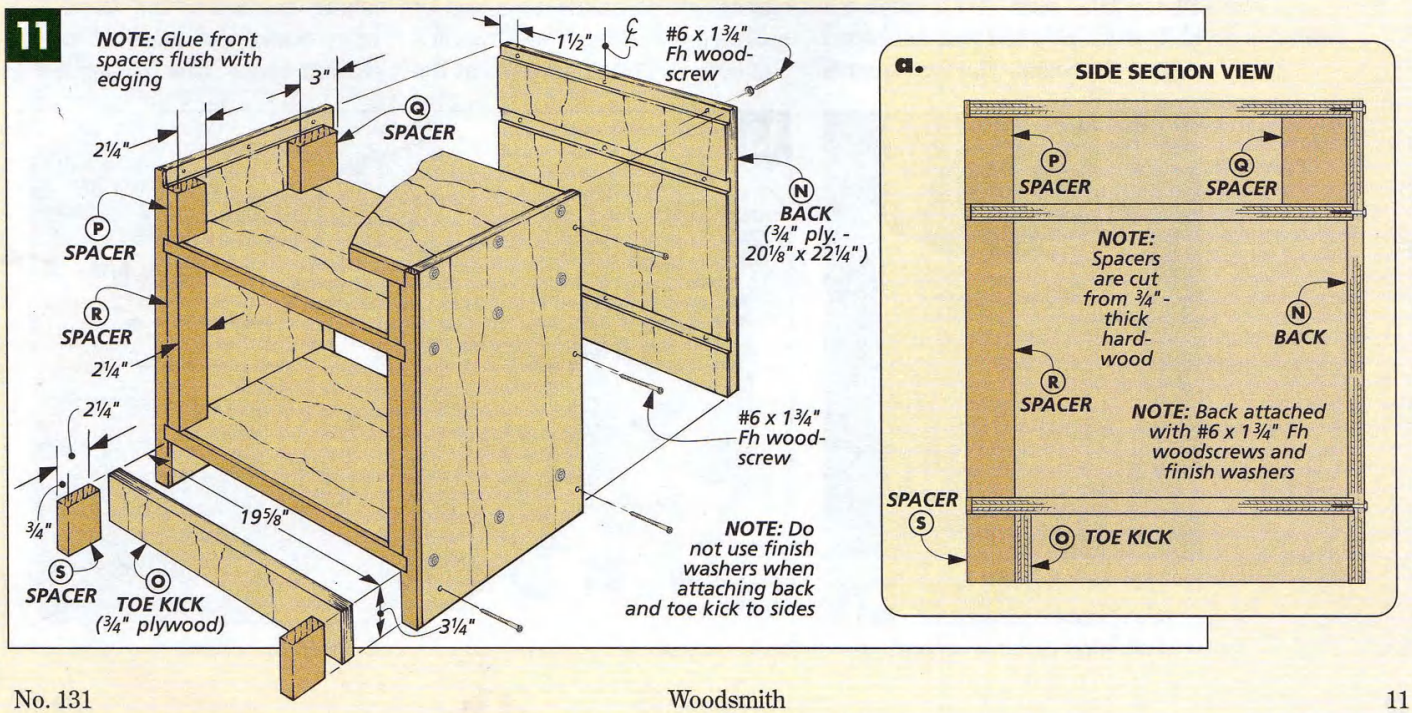

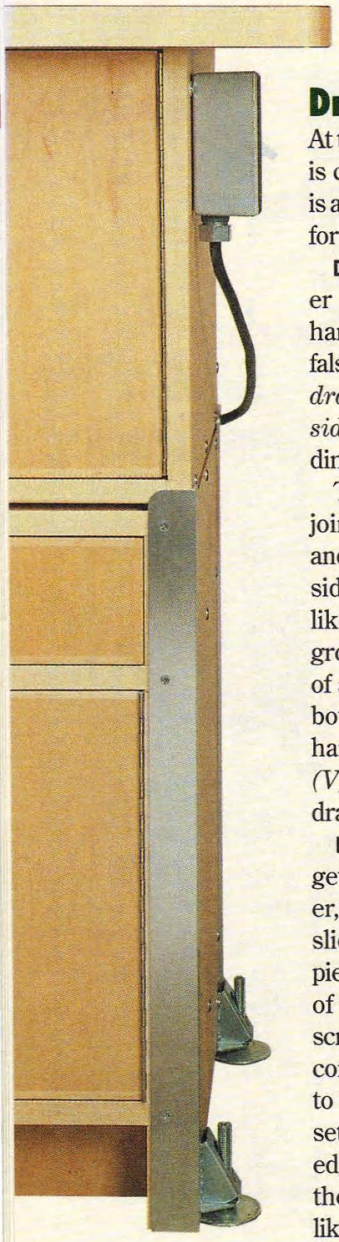

## Drawer & Doors

At this point, the carcase of the stand is complete. All you have to do now is add the drawer and make the doors for the storage compartment.

**DRAWER.** I decided to add the drawer first. It's made up of 1/2"-thick hardwood stock with a plywood false front. The first step is to cut the *drawer front* and *back (T)* and *sides (U)* to size according to the dimensions shown in Fig. 12.

The drawer is joined with rabbet joints and held together with glue and screws. Rabbets are cut in the side pieces, one at each end, just like you see in Fig. 12a. Then a groove is cut near the bottom edge of all four pieces to hold the drawer bottom. After cutting a piece of 1/4" hardboard for the *drawer bottom (V)*, you can glue and screw the drawer together.

**DRAWER SLIDES.** To make it easier to get to items at the back of the drawer, I used full-extension drawer slides. Each kind comes in two pieces — one is screwed to the side of the drawer and the other is screwed to the inside of the drawer compartment. The important thing to note is that the slides should be set back far enough from the front edge of the stand to allow room for the false front that is added next, like you see in Fig. 12a.

**FALSE FRONT.** As you can see in Fig. 12, the *false front (W)* is made out of 3/4"-thick plywood with hardwood edging all around. The false front is sized to allow a 1/16" gap on all four sides of the drawer front. Once the edging is applied, the false front can be centered on the front of the drawer and screwed in place.

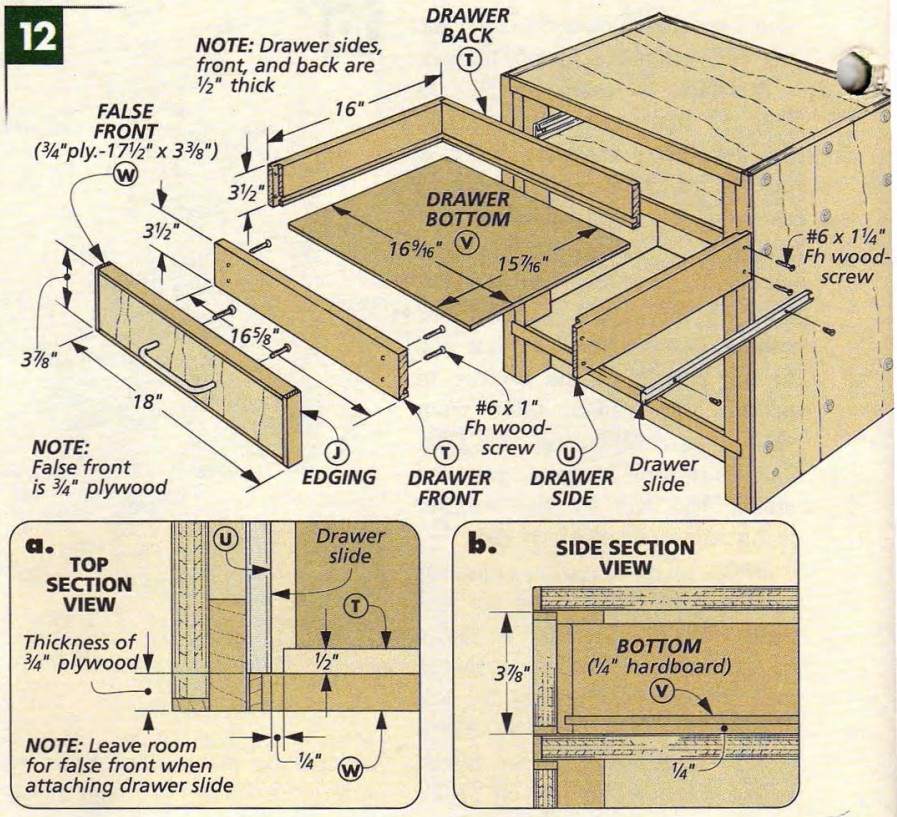


**DOORS.** Except for their size, the doors on the stand are identical to the ones you made for the cabinet. They are just a couple of plywood *door panels (X)* with hardwood edging on three sides. Once the edging is in place, the doors can be mounted to the stand with continuous hinges. (You'll have to cut the hinges down to size with a hacksaw to fit the doors.)

**HARDWARE.** To complete the doors and drawer, I added some pulls to the front to match the ones on the cabinet doors. Then I mounted a couple of magnetic catches to the inside of the stand for the doors (Figs. 13a and 13b).

**ALUMINUM.** At this point, all that remains is to add a couple of finishing touches to the stand. The most obvious of these is the aluminum angle that is applied to

▲ *This stand can also be used with other portable power tools, such as a thickness planer or a bandsaw.*

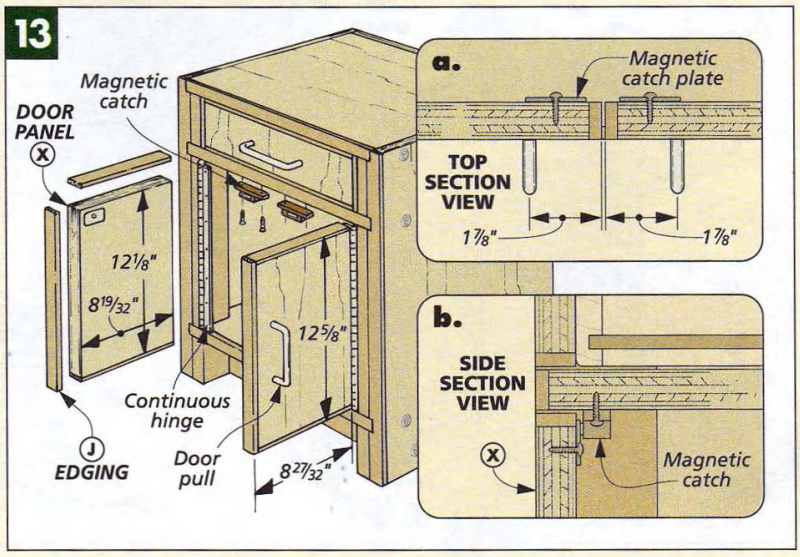

each corner of the stand. Besides strengthening the stand and protecting the corners, the aluminum angle also creates a lip to position the upper cabinet on the stand.

The way this works is quite simple. The aluminum angle is cut 3/4" longer than the height of the stand. This way, when it is attached to the corners of the stand, the ends will stick up and create a lip that holds the upper cabinet in place.

Since aluminum is soft, it can be easily cut with a hacksaw. You can also cut the aluminum on a table saw, using a carbide-tipped blade. Safety Note: Do not try to cut the aluminum on your table saw unless you have a carbide-tipped blade.

Once the aluminum is cut to length, you can drill and countersink the screwholes. A few seconds on a belt sander will round over the top corners of the aluminum angle, like you see in Fig. 14b. Then the aluminum angle can be screwed to the corners of the stand.

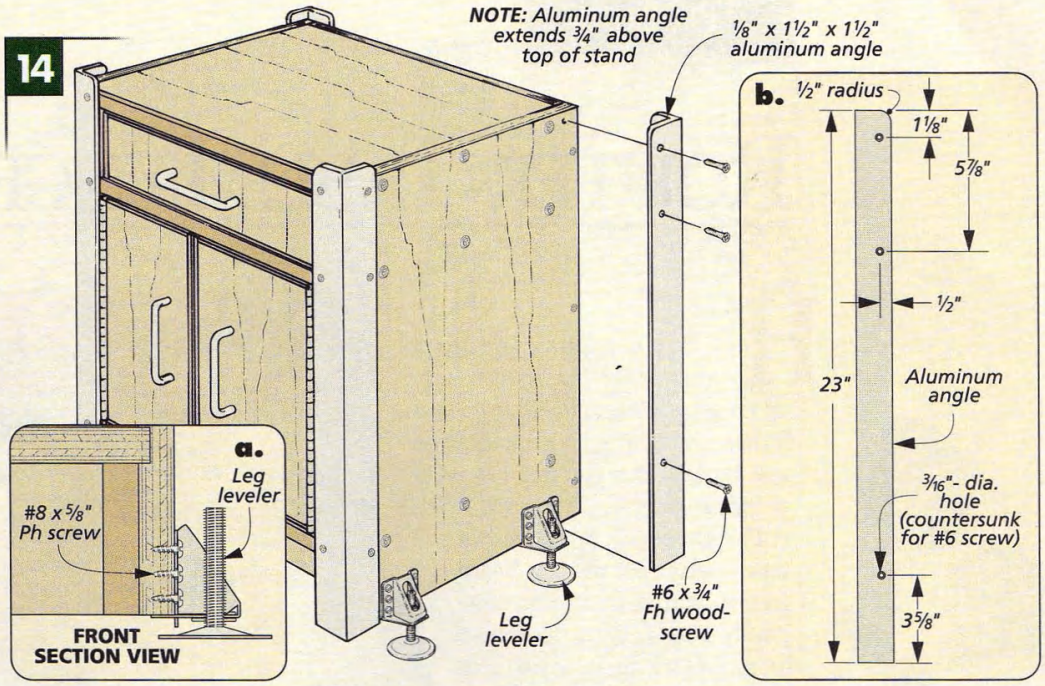


The final pieces of hardware to add are the four leg levelers (Fig. 14a). The ones I chose are really slick. They simply screw to the sides of the stand. But the nice thing about them is that they can be adjusted with an Allen wrench, without having to reach underneath the stand or turn it upside down. Once these are attached to the stand, you can apply a finish and mount your router to the insert in the top. W

## MATERIALS, SUPPLIES & CUTTING DIAGRAM

| | | |
|---|---|---|
| A | Top Panel (1) | 3/4 ply. - 21 1/2 x 28 1/2 |
| B | Top Skins (2) | 1/4 hdbd. - 21 1/2 - 28 1/2 |
| C | Ft./Bk. Edging (2) | 3/4 x 1 1/4 - 30 |
| D | Side Edging (2) | 3/4 x 1 1/4 - 23 |
| E | Ft./Bk. Cleats (2) | 1/2 x 1 - 8 |
| F | Side Cleats (2) | 1/2 x 1 - 6 |
| G | Cabinet Sides (2) | 3/4 ply. - 17 3/4 x 14 |
| H | Cabinet Back (1) | 3/4 ply. - 20 x 14 |
| I | Cabinet Bttm. (1) | 3/4 ply. - 17 1/4 x 20 |
| J | Ply. Edging (1) | 3/4 x 1/4 - 32 lin. ft. |
| K | Door Panels (2) | 3/4 ply. - 9 9/32 x 12 5/8 |
| L | Stand Sides (2) | 3/4 ply. - 17 7/8 x 22 1/4 |
| M | Dividers (3) | 3/4 ply. - 17 3/8 x 20 1/8 |
| N | Stand Back (1) | 3/4 ply. - 20 1/8 x 22 1/4 |
| O | Toe Kick (1) | 3/4 ply. - 19 5/8 x 3 1/4 |
| P | Frt. Drwr. Spacers (2) | 3/4 x 2 1/4 - 4 |
| Q | Bk. Drwr. Spacers (2) | 3/4 x 3 - 4 |
| R | Door Spacers (2) | 3/4 x 2 1/4 - 12 3/4 |
| S | Toe Kick Spacers (2) | 3/4 x 2 1/4 - 3 1/4 |
| T | Drwr. Ft./Back (2) | 1/2 x 3 1/2 - 16 5/8 |
| U | Drawer Sides (2) | 1/2 x 3 1/2 - 16 |
| V | Drwr. Bottom (1) | 1/4 hdbd.-15 7/16 x 16 9/16 |
| W | False Front (1) | 3/4 ply. - 17 1/2 x 3 3/8 |
| X | Door Panels (2) | 3/4 ply. - 8 19/32 x 12 1/8 |

- (1) Phenolic Insert Plate
- (1) 32" Dual Track w/Screws
- (16) #6 x 1 1/4" Fh Woodscrews
- (48) #6 x 1 3/4" Fh Woodscrews
- (40) #6 Finish Washers
- (4) 3/4" Rubber Bumpers w/Screws
- (5) Pulls w/Screws
- (4) Magnetic Catches w/Screws
- (2) 1 1/2" x 30" Piano Hinges w/Screws
- (4) Figure-8 Fasteners
- (8) #8 x 1" Fh Woodscrews
- (1 pr.) 16" Drawer Slides w/Screws
- (4) Leg Levelers
- (24) #8 x 5/8" Ph Sheet Metal Screws
- (4) 1/8" x 1 1/2" x 1 1/2" x 24" Alum. Angle
- (24) #6 x 3/4" Fh Woodscrews
- (4) #6 x 1" Fh Woodscrews

*3/4" - 48" x 96" Maple Plywood*

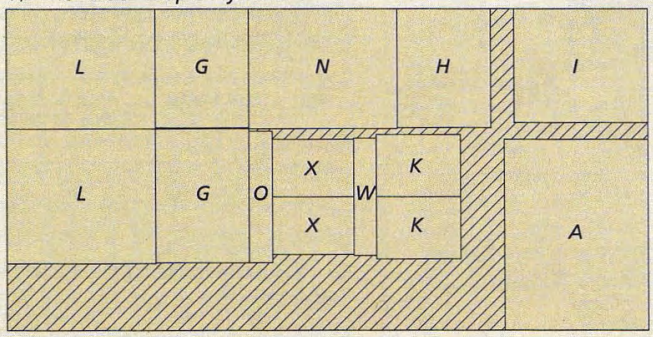


*3/4" - 48" x 48" Maple Plywood*

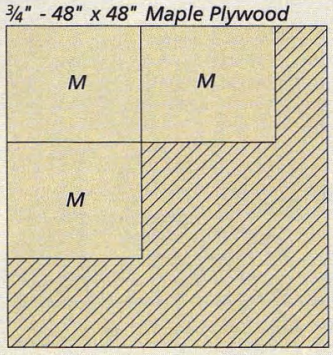


***ALSO NEEDED:***

*1/4" - 48" x 48" Tempered Hardboard*

*6 Board Feet of 3/4" Maple*

*2 Pieces of Plastic Laminate (24" x 32")*

# ROUTER TABLE FENCE

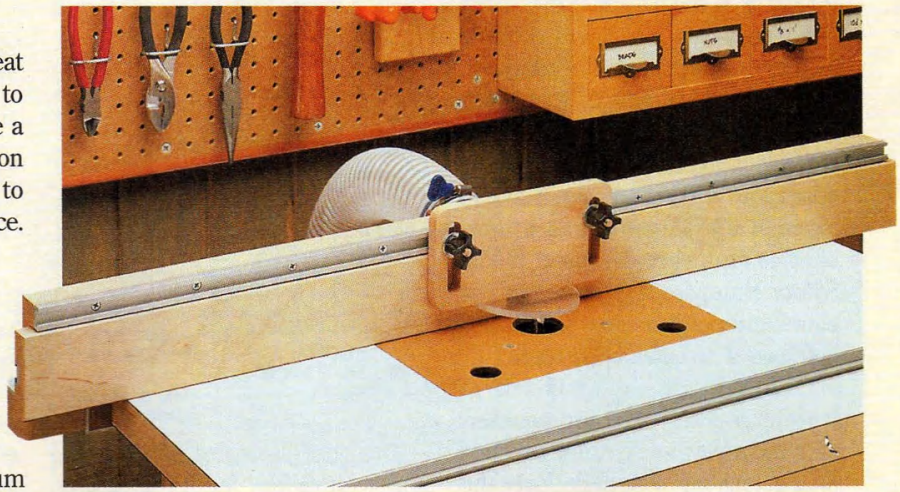

How do you improve on a great router table? The answer is to add a great fence. Now there are a lot of router table fences out there on the market. But you don't have to spend big bucks to get a quality fence.

The shop-built fence shown here is made out of a few board feet of lumber and some commonly available hardware items. In fact, the *only* part that you probably won't be able to find at your local lumberyard or hardware store is the aluminum track at the top of the fence and on the back of the sliding faces (see page 35 for sources).

This fence clamps firmly to your router table and provides a rigid, straight surface for guiding your workpieces. The two front faces are adjustable for different size bits. And the T-track along the top of the fence allows you to add some handy accessories, like a bit guard or featherboard.

**ALUMINUM ANGLE.** The secret to making the fence strong yet lightweight can be seen in Fig. 1. A length of aluminum angle serves as the backbone of the fence.

To make the fence, I started by cutting the aluminum to length and drilling the holes for the screws and bolts that will be used to attach the various parts of the fence to the aluminum. (The screw hole locations can be seen in Figs. 1a and 1b.)

After the holes are all drilled, you can lay out the bit opening in the middle of the aluminum. To remove the waste, simply drill holes in the corners like you see in Fig. 2 and cut away the waste with a sabre saw and a metal-cutting blade (Fig. 3). You'll probably need to clean up the edges of the opening with a file.

The last bit of work to do on the aluminum angle is to radius the two back corners as shown in Fig. 1b. This can be done quickly on a disc or belt sander.

**FENCE.** The aluminum angle gets attached to a hardwood fence. This *fence (A)* is just a piece of 3/4"-thick hardwood with a shallow rabbet cut along one edge to receive the aluminum angle (Fig. 4). After cutting the rabbet, the aluminum angle can be screwed to the back of the fence (Fig. 5). Then four holes can be drilled through the fence for the toilet flange bolts that will attach the sliding faces later (Fig. 1a).

It's hard to get good results when

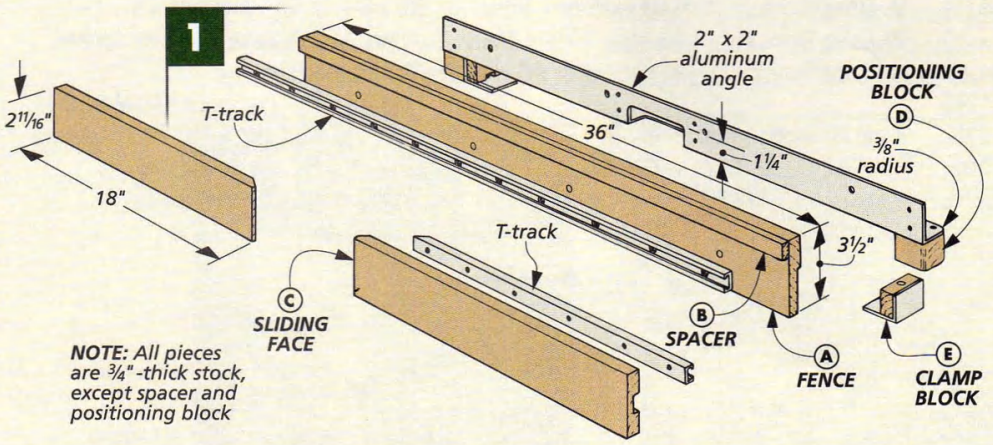


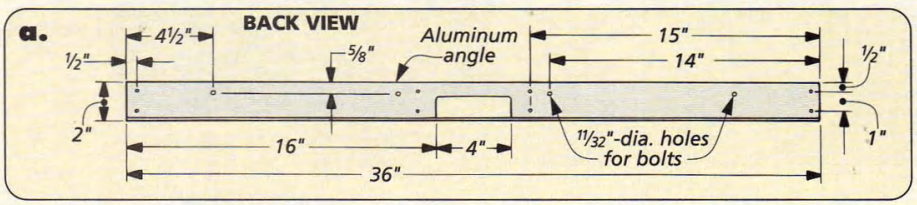


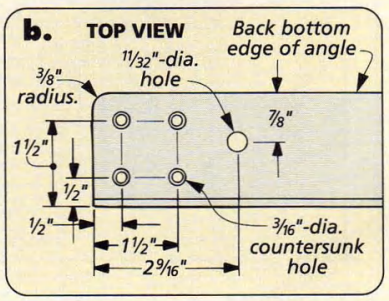

you're routing with a fence that's twisted or bowed. And while the aluminum angle is pretty straight, I wanted to make sure the front face of the fence was as straight and flat as possible. So once it was mounted to the aluminum, I took a couple of light passes on a jointer to flatten the wood face of the fence.

Now that the fence is flat, you just need to cut out the area of the bit opening. You can use a sabre saw to remove most of the waste and then come back with a router and flush trim bit to clean up the opening, as shown in Fig. 6. After the opening is trimmed flush, a chamfer is routed along the inside edges to provide clearance for extra-large bits.

**T-TRACK.** One of the neat features of this fence is the T-track that runs along the top. This allows you to attach a bit guard or a featherboard at any point along the length of the fence without having to use clamps.

As you can see by looking at Fig. 7, the T-track is mounted to a *spacer (B)* that is in turn glued to the front of the face. The thickness of this spacer is important. You want to make sure that the T-track won't extend beyond the sliding faces that will be added later.

After gluing the spacer to the front of the fence flush with the top edge, you can add the T-track. This is just screwed in place.

**SLIDING FACES.** If you take another look at Fig. 1, you'll see that right below the spacer and T-track are a couple of *sliding faces (C)*. These slide on a second piece of T-track. The two faces start out as a single, 3/4"-thick blank, slightly over 36" long. A groove is cut down the center of the blank to hold the T-track that is used to attach the faces to the fence. (Make sure that the groove lines up with the holes in the fence.)

After the groove is cut and the T-track is screwed in place, the blank can be cut into two 18"-long faces. Then the ends of the faces are chamfered to create clearance for the bit. You can see this in Fig. 7a. Finally, the faces are attached to the fence with toilet flange bolts and plastic knobs (Fig. 7b).

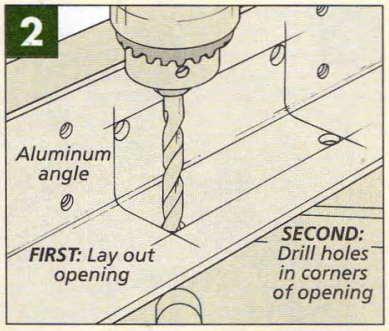


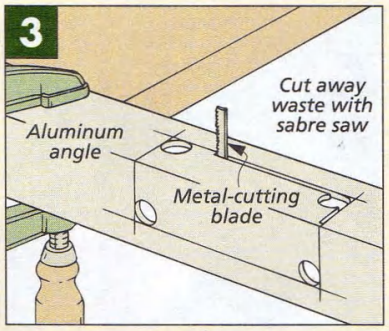


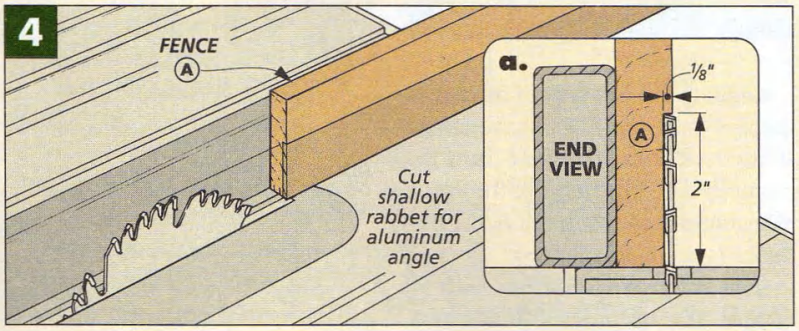


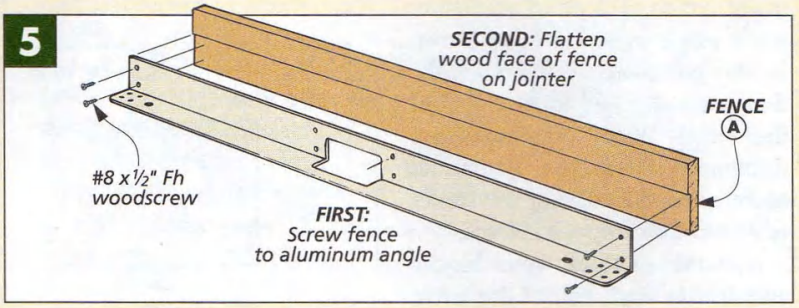


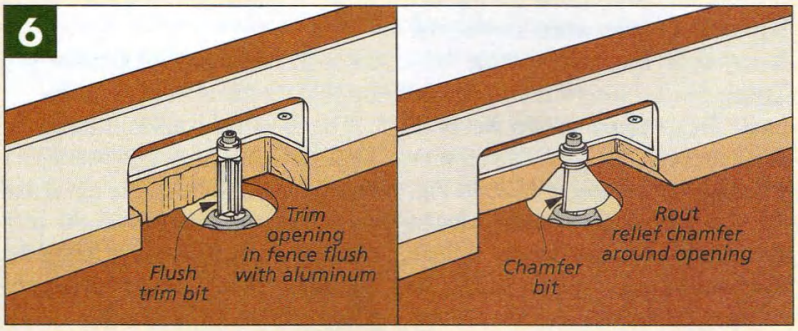


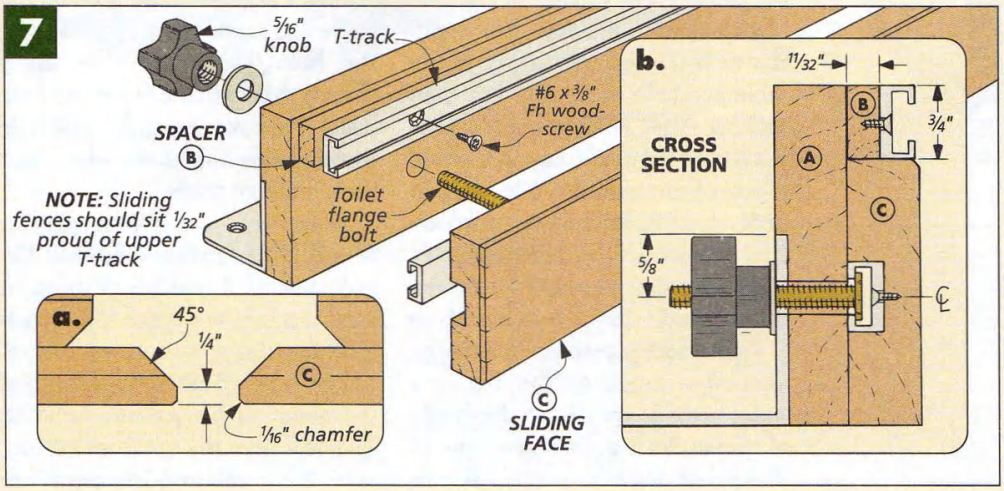

▲ *Toilet flange bolts and threaded knobs are used to attach the sliding faces to the fence.*

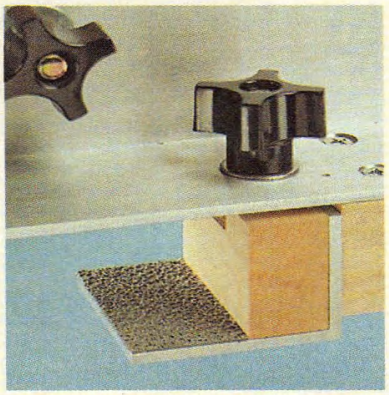

*A short piece of aluminum angle, a block of wood, a knob, and a few pieces of hardware are all it takes to make this fence hold-down.*

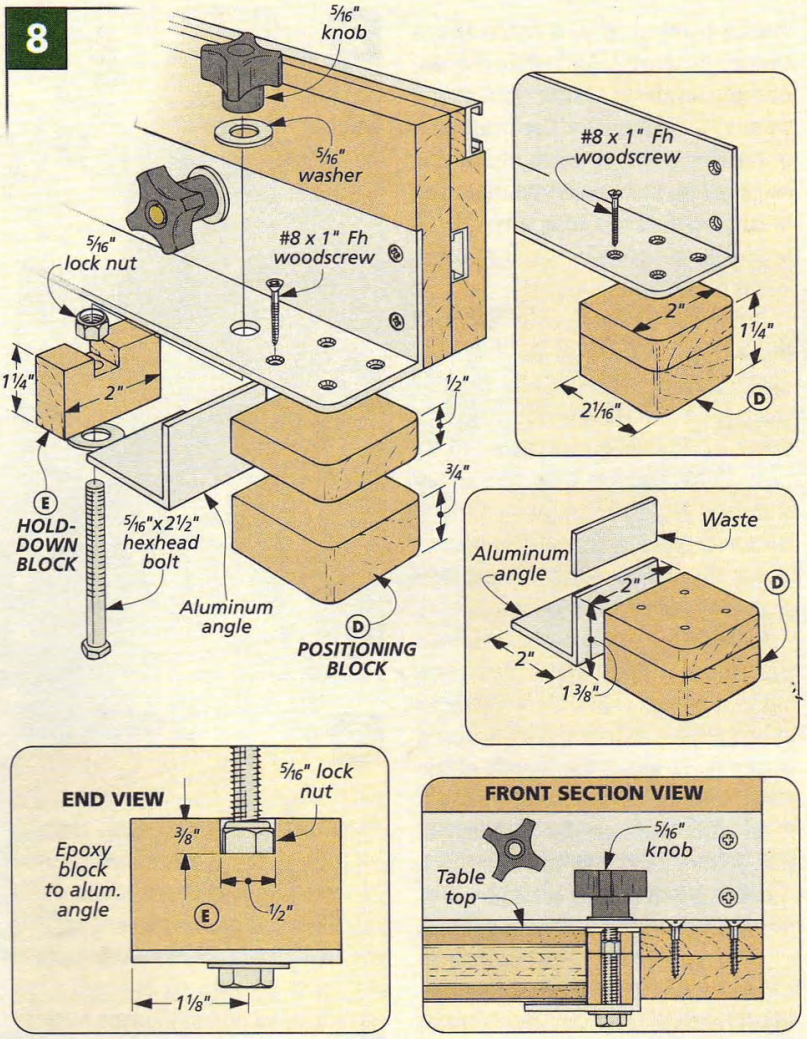


Designing the last part of the fence proved to be the most challenging. The trick was to figure how to securely clamp the fence to the top of the router table, but still allow the fence to be easily adjusted.

The solution I came up with is simple. It's just a small hold-down made out of a piece of aluminum angle and a wood block, as shown in the photo above. These hold-downs are attached to each end of the fence. When the knobs are tightened down, the aluminum angle grips the edge of the router table top with surprising force.

A couple of thick wood blocks attached to each end of the fence prevent the hold-downs from rotating out of position when moving the fence over the router table top. These *positioning blocks (D)* are made first. I glued up two pieces of stock for each block, ending up with a finished thickness of 1¼". In Fig. 8a, you can see how these blocks are attached to the fence. Before they're screwed in place, the sharp corners of the blocks are relieved on a sander, like you see in Fig. 8b.

**HOLD-DOWNS.** Making the hold-downs that secure the fence to the table is a little more involved than making the positioning blocks. Each one is made up of a short piece of aluminum angle. But in order for the hold-down to match the thickness of the table top, you'll have to cut down one side of the aluminum angle, as shown in Fig. 8b.

To provide a means of bolting the aluminum angle to the fence, a wood block is epoxied to the inside of the angle. Fig. 8c shows one of these *hold-down blocks (E)*. Before these blocks are glued in place, you need to do a little work on them.

The first step after cutting the hold-down blocks to size is to drill a hole for a bolt in both the block and the aluminum angle. To do this, clamp the block to the inside of the aluminum angle. Then place the block with the aluminum angle against the positioning block on the fence and mark out the location for the bolt (using the hole that's already drilled in the fence as a template). Now you can drill a bolt hole through the hold-down block and the aluminum angle.

To prevent the bolt from spinning when tightening the knob on the hold-downs, I used lock nuts. A small notch is cut in the top of each hold-down block to receive the nut. The trick here is to size the width of the notch so the nut fits in snug. This will keep the nut from turning once the hold-down is assembled. You can get a better idea of what I'm talking about by looking at Fig. 8c.

**ASSEMBLY.** As you can see in Fig. 8d, assembling the hold-downs is pretty easy. Start by inserting a lock nut into the notch on each hold-down block. Then epoxy the blocks to the aluminum angle. Now to attach the hold-downs, simply thread a bolt (with a washer) through the aluminum angle and the block. A plastic knob then secures the assembly to the fence. Finally, to help give the hold-downs a little more gripping power, I placed a piece of self-adhesive rubber grip tape on the inside face of the aluminum angle, like you see in the photo above.

**FINISH.** To help protect the wood surfaces of the fence, I wiped on a couple coats of an oil finish. Then after the finish dried, I applied a coat of paste wax to the fence and sliding faces to reduce friction and to make them easier to adjust. W

# Router Table Fence Accessories

## Bit Guard

This bit guard is designed to attach to the T-track along the top of the fence. The guard consists of a hardwood back and a shield made from 1/4" polycarbonate plastic (Plexiglas). After cutting two adjustment slots in the back, the shield is screwed in place.

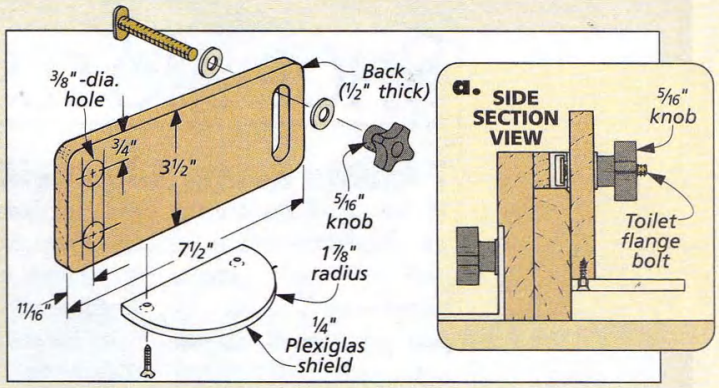


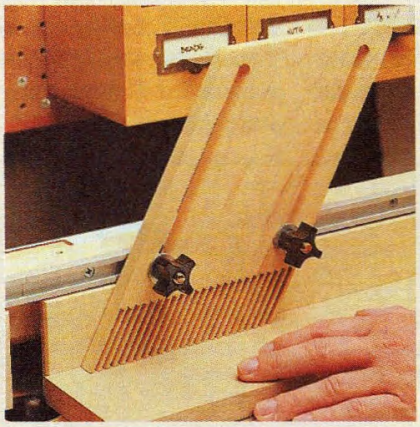

## Featherboard

One nice thing about this featherboard is that it can be attached to the fence or to the top of the table. It's just a piece of 1/2"-thick hardwood with mitered ends. To cut the slots that form the fingers, I tilted the table saw blade and clamped the featherboard to an auxiliary fence attached to the front of the miter gauge.

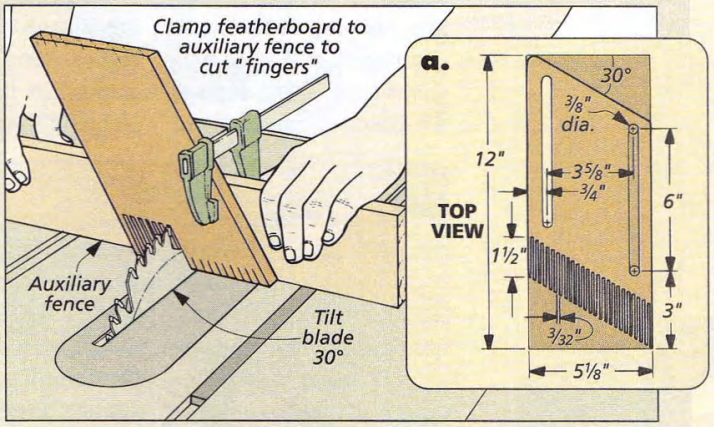

## Dust Collection

To help remove sawdust, I added a dust hood to the back of the fence. This is made out of a few pieces of hardboard and a strip of hardwood and screws directly to the back of the fence. With a few plastic fittings (see page 35), you can attach your shop vacuum to the back of the router table cabinet as well as the fence.

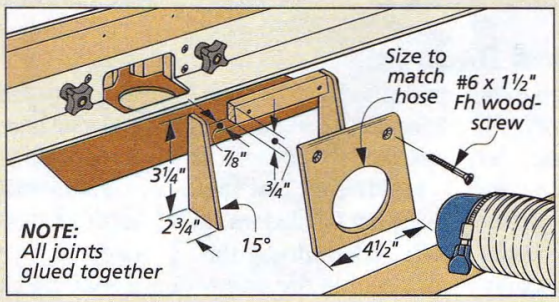


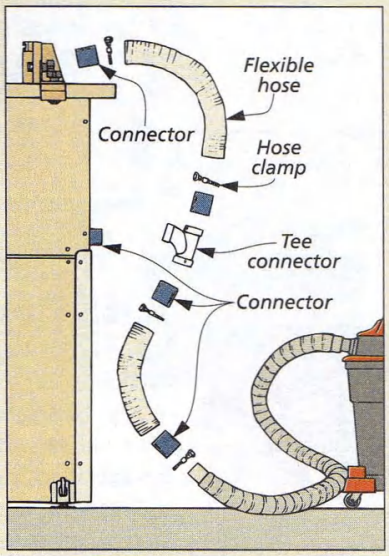


## MATERIALS & SUPPLIES

| | | | | |
|---|---|---|---|---|
| **A** Fence (1) | 3/4 x 3 1/2 - 36 | • (2) 36" T-Tracks w/Screws | • (2) 5/16" x 2 1/2" Hex Head Bolts |
| **B** Spacer (1) | 3/4 x 11/32 - 36 | • (4) 5/16" x 1 3/4" Toilet Flange Bolts | • (2) 5/16" Lock Nuts |
| **C** Sliding Faces (2) | 3/4 x 2 11/16 - 18 | • (6) 5/16" Through-Hole Star Knobs | • (8) #8 x 1" Fh Woodscrews |
| **D** Positioning Blocks (2) | 1 1/4 x 2 - 2 1/16 | • (8) 5/16" SAE Flat Washers | • (8) #8 x 1/2" Fh Woodscrews |
| **E** Hold-down Blocks (2) | 3/4 x 1 1/4 - 2 | • (1) 1/8" x 2" x 2" Alum. Angle (42" long) | • (1) 6" of Anti-Skid Tape (2" wide) |

NOTE: List does not include hardware for accessories

# SHOP NOTES

## T-Square Router Edge Guide

The nice thing about using a hand-held router to cut a dado is you can see what's happening. The trick is positioning the edge guide so the router bit will line up exactly with the layout line.

For the stopped dadoes in the storage chest case (on page 22), I used a T-shaped guide that aligned the bit easily *and* helped keep the dadoes square to the panels. And best of all, it requires just a couple straight scrap pieces.

To build the T-square edge guide, I screwed the long straightedge to the crosspiece, using a framing square to position the pieces and a couple clamps to hold them in place, as shown in Fig. 1.

Then I routed through the crosspiece to make setting up the guide easier (Fig. 1b). Simply align the dado on the crosspiece with the layout mark on the side panel, as shown in Fig. 2b. But when setting up the edge guide, keep in mind that you need to move the router from left-to-right (assuming it's between you and the fence), just like any hand-held routing operation. Otherwise the bit may pull the router away from the guide.

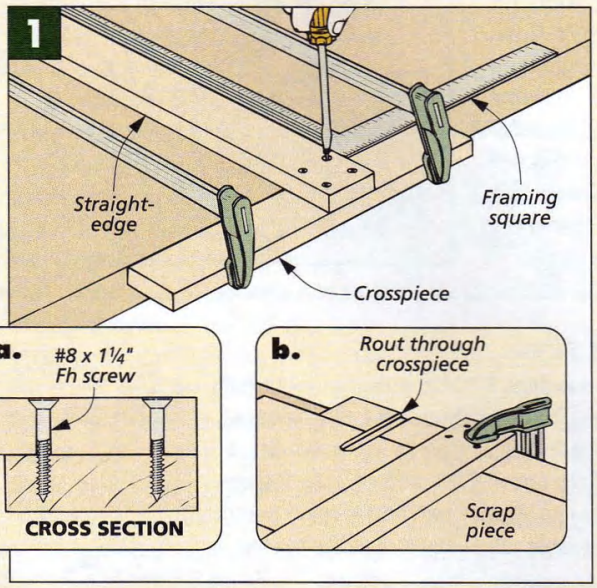


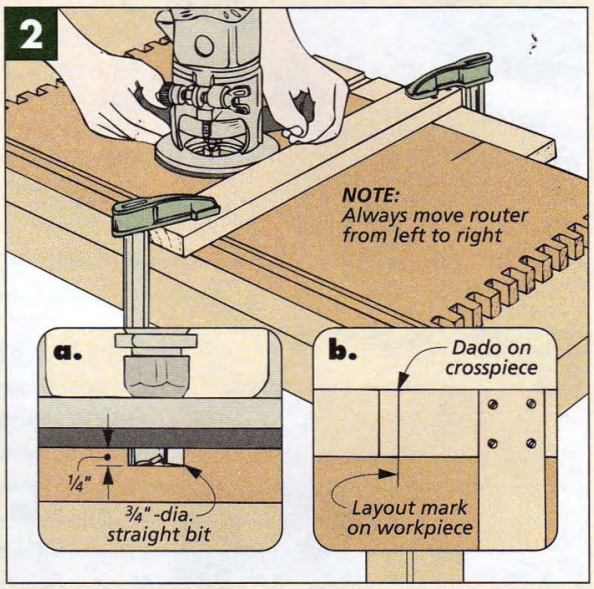


## Small Stopped Dadoes

▲ *Before drilling out the stopped dadoes, I scored the shoulders with a utility knife. This made the clean-up easier later on.*

I typically rout stopped dadoes on the router table or with an edge guide (as shown above). But on the box joint clock, the stopped dadoes were cut between the two grooves, and the pieces were fairly small. So I decided to cut the dadoes just like I would a mortise.

**LAYOUT.** The first step is to lay out the dadoes carefully. When doing this, I also scored the edges to make the dadoes easier to clean up later, as shown in the margin photo at left.

**OVERLAPPING HOLES.** Next, most of the waste of the dado can be removed with a Forstner bit (Fig. 1).

**CLEAN DADO.** Now all that's left is to clean up the dado. I use a wide chisel on the shoulders (Fig. 2). And a narrow one (with the bevel down) for the bottom (Fig. 3).

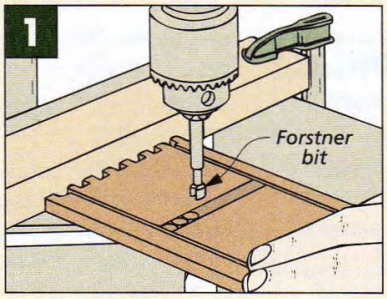


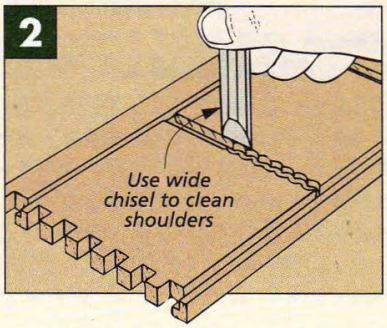


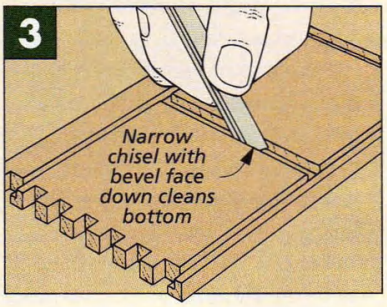

## Router Table Insert

When it comes to creating the opening for the insert plate for the router table on page 6, there are two things to be concerned with. You want the plate to fit the opening like a glove and you want it to be flush with top of the router table.

Making the opening for the insert plate involves three steps — laying out the opening, cutting out the waste, and trimming the opening with a router so the plate fits perfectly.

**LAYOUT.** To lay out the opening, I like to use the insert plate as a template. For the router table shown on page 6, the insert plate is centered on the table. A framing square makes it easy to position the plate square with the edges of the table, as shown in Fig. 1.

Carpet tape will hold the insert firmly in place while you carefully trace around the edges. These lines serve as a guide for rough-cutting the opening as well as positioning the template for routing the opening smooth.

**ROUGHING OUT.** The next step is to cut out the opening with a sabre saw. In order to do this, I began by drilling a couple of starter holes in opposite corners of the waste area. Then I use a sharp, new blade to rough out the sides of the opening, staying about 3/16" away from the layout lines (Fig. 2).

**TRIM OPENING.** After rough cutting the opening, the last step is to trim the edges to match the size of the insert plate. To do this, I made a template by simply taping down some strips of 1/4" hardboard along the layout lines on the top, just like you see in Fig. 3. (You can use the insert plate to test the size of the template opening.)

Once the strips are in place, the opening can be trimmed with a router and a pattern bit (see margin photo at right). There's just one thing to keep in mind. Since most pattern bits are only 1" long, you'll need to make two passes, increasing the cutting depth after the first pass. You can see what I'm talking about in Figs. 4a and 4b.

**ATTACHING CLEATS.** Once you've created the opening, all that's left is to attach cleats to the sides of the opening to support the insert plate. The trick is to position the cleats so the plate ends up flush with the top. Here's a foolproof way to do this. Just set the top face-down on a flat surface. Then drop the insert plate in the opening and glue and screw the cleats in place, like you see in Figs. 5 and 5a. W

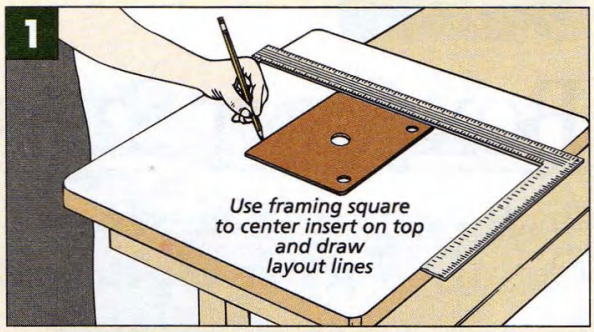


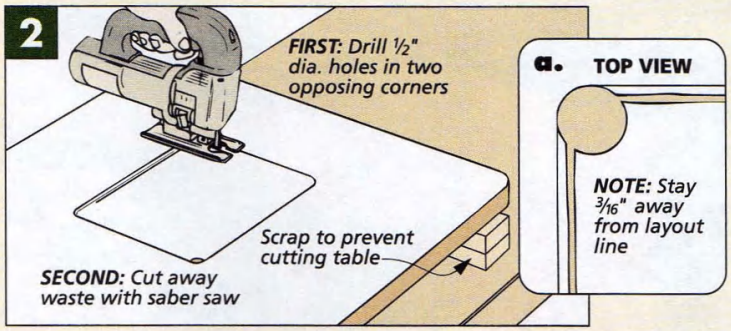

▲ *A pattern bit has a guide bearing at the top of the bit.*

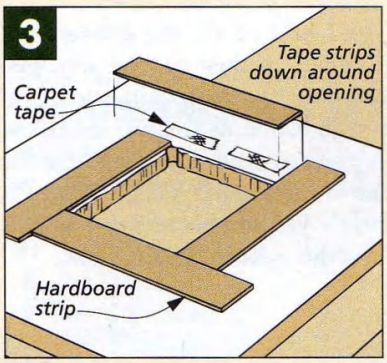


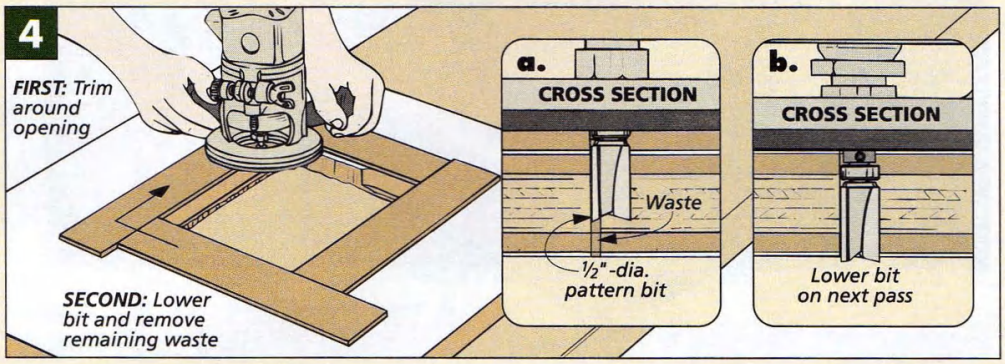


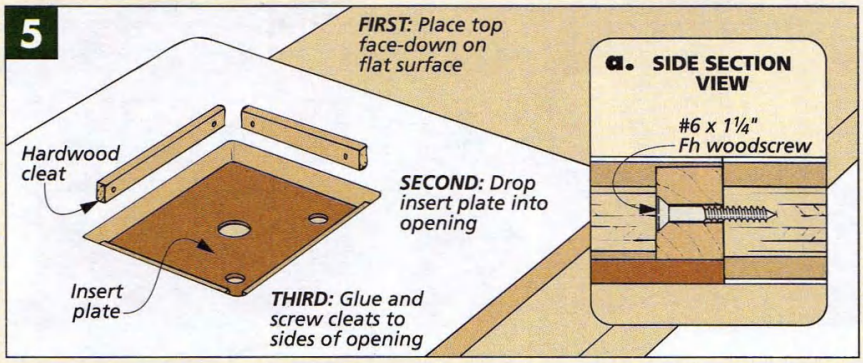


*To mount a router in the table, simply remove the baseplate of the router and use it as a template for locating the screw holes in the insert plate.* ►

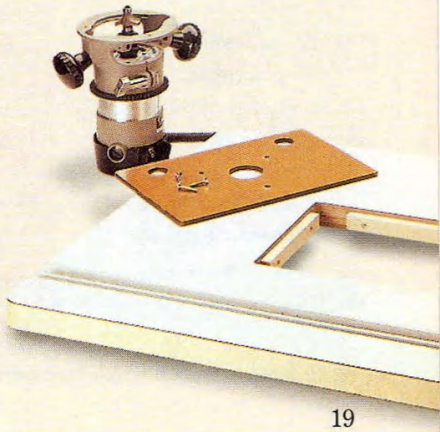

# BOX JOINT STORAGE CHEST

*Inside — a place for everything.*
*Outside — box joints take center stage.*

By and large, the *work* of woodworking — the joinery — goes mostly unnoticed. Not with this chest. The consistent spacing of the box joints creates a lot of visual interest on what would otherwise be a rather plain chest.

However, being "front and center," these box joints will also be subject to some close inspections. So their fit should be about perfect. This isn't anything to worry about. Box joints may *look* exacting, but the accuracy is built into a shop-made jig that has an indexing key. Once the jig is fine tuned, you could almost cut them with your eyes closed. (But please don't.)

There's something else impressive about this chest — it's all the storage space. There are three rows of deep drawers, and these drawers can be built in three different sizes. The smallest is just right for CDs, while the largest will hold just about anything you'd want to put in a drawer.

And best of all, the drawers are designed so they can be arranged (and even rearranged) in a variety of configurations, as you can see below. So you can choose the one that fits your storage needs. Plus, on page 25, there's yet another version of this chest that rolls on small casters.

***What kind of storage do you need?*** *There's a lot of flexibility in the number and size of the drawers on this chest. So you can customize them to fit your particular storage needs.*

# Construction Details

***OVERALL DIMENSIONS:***
***27⅝"H x 27⅛"W x 14"D***

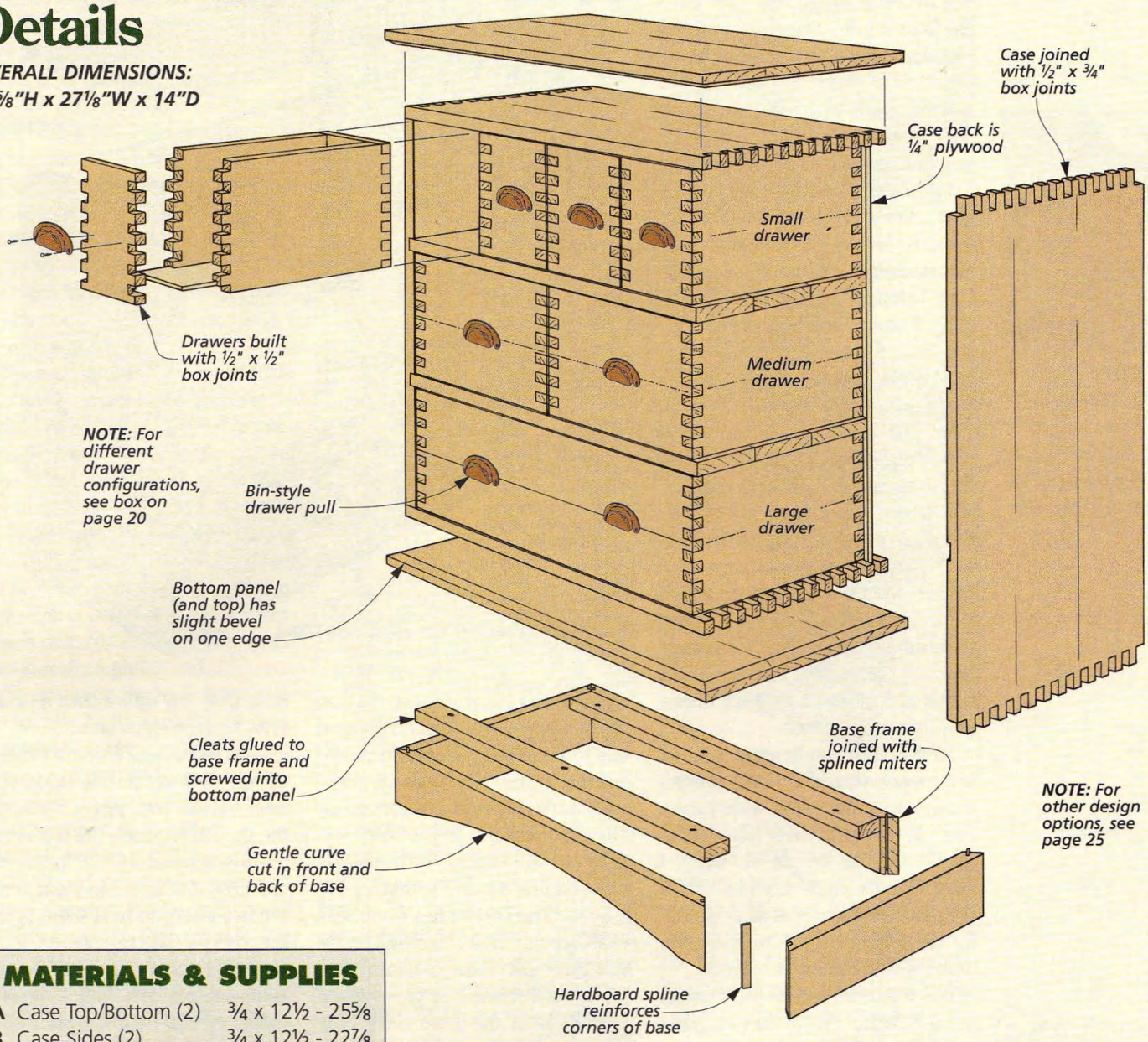


**NOTE:** *For other design options, see page 25*

## MATERIALS & SUPPLIES

| | | |
|---|---|---|
| **A** | Case Top/Bottom (2) | ¾ x 12½ - 25⅝ |
| **B** | Case Sides (2) | ¾ x 12½ - 22⅞ |
| **C** | Case Back (1) | ¼ ply. - 24⅝ x 21⅞ |
| **D** | Case Dividers (2) | ¾ x 11¾ - 24⅝ |
| **E** | Top/Btm. (2) | ¾ x 14 - 27⅛ |
| **F** | Base Front/Back (2) | ¾ x 3¼ - 26⅝ |
| **G** | Base Sides (2) | ¾ x 3¼ - 13½ |
| **H** | Base Cleats (2) | ¾ x 1½ - 25⅛ |
| **I** | Large Drawer Fr./Bk. (2) | ½ x 6½ - 24 |
| **J** | Medium Dwr. Fr./Bk. (4) | ½ x 6½ - 12 |
| **K** | Small Dwr. Fr./Bk. (8) | ½ x 6½ - 6 |
| **L** | Drawer Sides (14) | ½ x 6½ - 11¾ |
| **M** | Lg. Dwr. Btm. (1) | ¼ ply. - 11¼ x 23½ |
| **N** | Med. Dwr. Btm. (2) | ¼ ply. - 11¼ x 11½ |
| **O** | Sm. Dwr. Btm. (4) | ¼ ply. - 11¼ x 5½ |

- (8) 3"-wide Bin Pulls w/Screws
- (6) #8 x 2" Rh Woodscrews
- (6) #8 Flat Washers

## CUTTING DIAGRAM

*¾" x 5" - 96" Cherry (Six Boards @ 3.3 Bd. Ft. Each)*

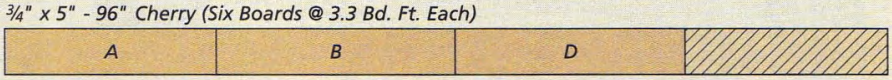


*½" x 4" - 96" Cherry (Four Boards @ 2.7 Sq. Ft. Each)*

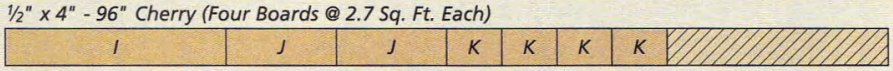


*½" x 4" - 96" Cherry (Four Boards @ 2.7 Sq. Ft. Each)*

*¾" x 5" - 96" Cherry (Two Boards @ 3.3 Bd. Ft. Each)*

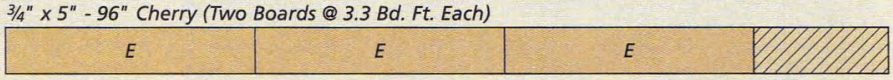


*¾" x 4" - 96" Cherry (Two Boards @ 2.7 Bd. Ft. Each)*

***ALSO NEEDED:*** *One 24" x 48" piece of ¼" cherry plywood and one 24" x 48" piece of ¼" maple or birch plywood*

## Case & Dividers

The mechanical precision of box joints can look intimidating — the pins and slots interlock tighter than the teeth on a pair of gears. But believe it or not, box joints don't take any great skill. The consistency and precision are achieved with an easy-to-build jig.

**CUT TO SIZE.** The first thing to do is glue up four 3/4"-thick blanks for the *top (A), bottom (A)* and *sides (B).* But instead of cutting these to final size, I ripped them 1/4" extra wide. (Fig. 1 shows finished sizes.) This way, after the box joints are cut, you can rip the pieces so there's a full slot or pin on both edges.

**CUT BOX JOINTS.** With the workpieces cut to size, the box joints can be cut on the ends of each piece. If you haven't cut box joints before, there's an article on page 26 that will walk you through this process step-by-step. But even if you have cut box joints before, there are a few things to keep in mind. That's because building a large case with box joints requires a different strategy than a small box or a drawer.

First of all, keep in mind that the front fence should be long and tall enough to support the wide panels (Fig. 2). Second, even though the slots here will be cut 3/4" deep, I made the key a hair less than 1/2" tall (Fig. 2a). This way, this same jig can be used later when building the drawers with their shorter pins.

When fine-tuning the box joint jig (as described in the box on page 27), I didn't size the pins to fit quite as tight as I usually do. A large case requires more glue and clamps, which takes more time. So my goal was to be able to press the pieces together completely by hand. (However, you'll still want a mallet handy when you add glue to the joint.)

To cut the joints, you'll need to start with the top and bottom pieces (Fig. 2). The reason has to do with small, square "holes" that will be visible *after* the case is assembled. (These are created by grooves cut later to hold the case back.) By starting with the top and bottom, the holes will end up at the top of the case (Fig. 7), where they'll be covered by a top panel later.

One last thing. When it's time to cut the first slot on the sides, you'll need to have *both* pieces set against the jig. These panels are too large to do this without a little "help," so I clamped a long scrap cleat across the two pieces to hold them tight to the fence, as you can see in Fig. 3.

**GROOVE FOR BACK.** With the box joints cut, the next thing to do is cut the groove to hold the back of the case (Fig. 4). A 1/4" plywood back is closer to 3/16" thick, so I cut this

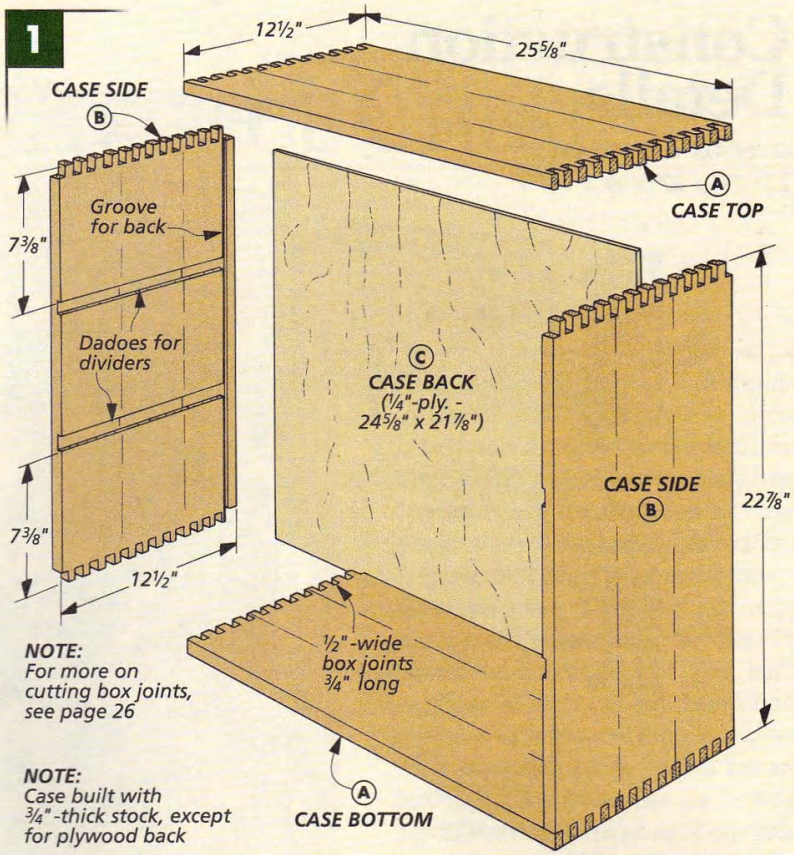


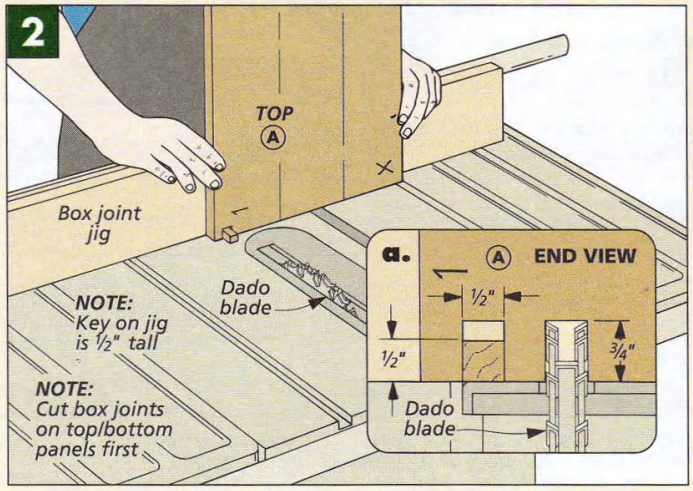


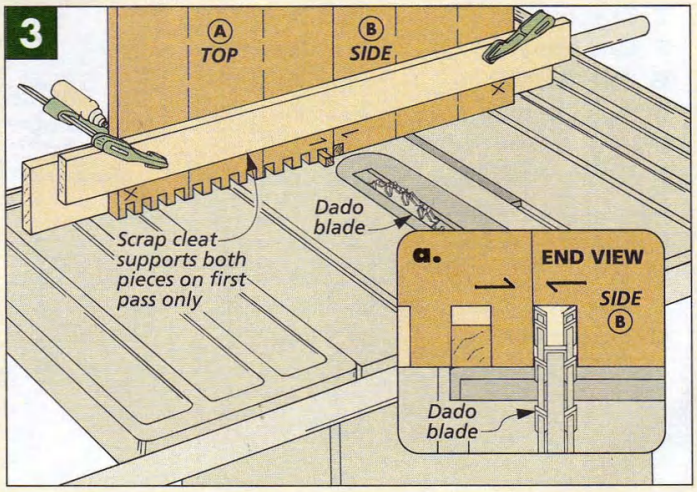

groove in two passes, nudging the rip fence away from the blade for the second pass. Initially, I set the fence ½" from blade, but the important thing is to check that the blade lines up with the box joints (Fig. 4a).

**STOPPED DADOES.** Now the top and bottom panels can be set aside so you can cut ¼"-deep dadoes for a pair of dividers (Figs. 5 and 7). These dadoes stop at the groove for the back. To make it easier to see what was happening, I decided to cut them with a hand-held router and an edge guide.

There are a variety of edge guides you can use here. I quickly made a guide shaped like a "T." The crosspiece screwed to the straightedge helps when positioning the guide (See the margin photo and page 18).

When setting up the edge guide, it should be located so the groove will be routed left-to-right from the front edge of the panel to the groove in back (Fig. 5). This way, you won't need to make a plunge cut.

The groove at the back is too narrow for the bit to rout the dadoes completely. So after the dadoes have been routed, the back edge of each dado needs to be cleaned up with a chisel, as shown in Fig. 5b.

**BACK.** Now you can dry assemble the case and cut the ¼" plywood *back (C)* to size. (I often cut a panel like this a hair less than full size so it won't prevent the box joints from going together completely.)

**ASSEMBLY.** To assemble the case, I did a couple dry runs and found it helpful to carpet tape some clamping blocks to the box just behind the pins, as you can see in Fig. 6. (These help spread out the clamping pressure.) And to glue up the case, I chose liquid hide glue so I'd have about twenty minutes to get the glue on and all the pieces pulled tight.

**DIVIDERS.** The last step is to glue up panels for the *dividers (C)* that will support the drawers (Fig. 7). Gluing a wide panel into a dado isn't easy. If the fit is tight, you'll never get the piece in place. Too loose, and you'll end up with gaps. But here's a simple trick: Lightly sand the ends of the bottom face (except for the front 1" or so) to reduce the friction. The piece will slide in much easier.

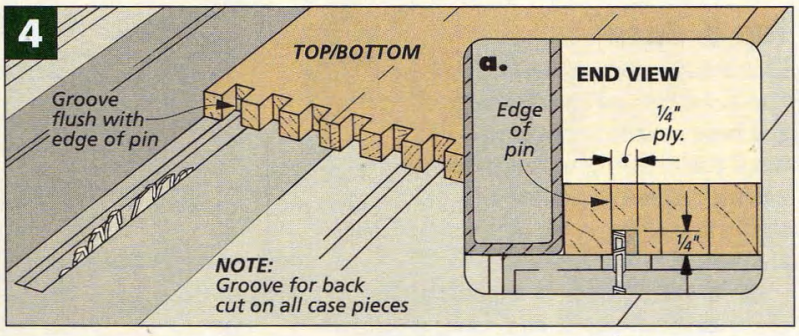


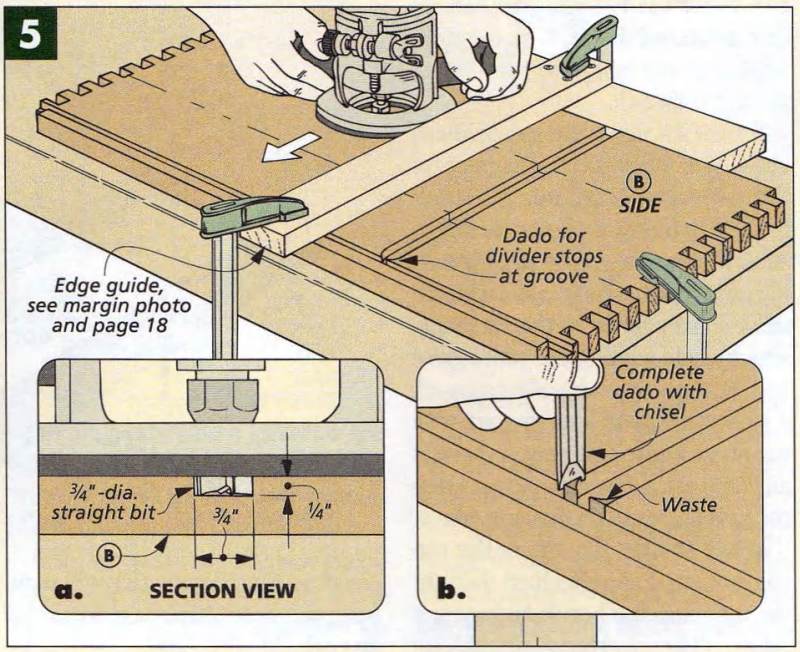

▲ *A simple edge guide makes it easy to rout a stopped dado. To see how it works, turn to page 18.*

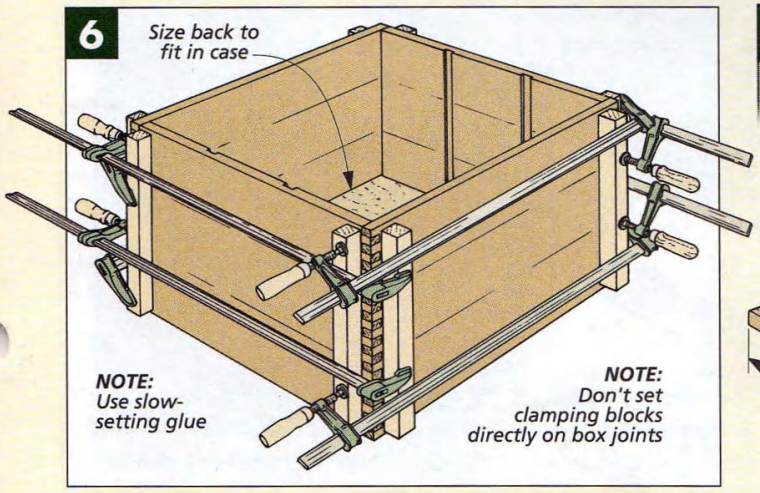


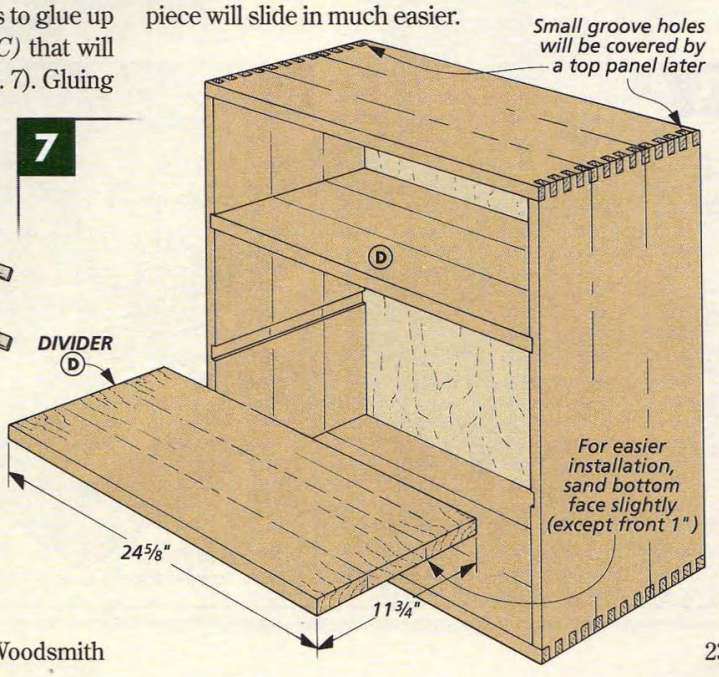

▲ *This chest can be built with a traditional top and base (shown here). Or with casters (see box on page 25).*

## Top & Base

I wanted the storage chest to have a traditional look, so I worked on a top and base next (see margin photo). But if you're toying with the idea of whether or not to add casters (as shown in the box on the next page), now's the time to decide.

**TOP & BOTTOM.** For a traditional chest, the first thing to do is glue up panels for the *top (E)* and *bottom (E)*, as shown in Fig. 8. They're cut to size to overhang the case 3/4" all around (Fig. 8a).

**CUT BEVELS.** After the panels were cut to size, I beveled the edges with the table saw (Fig. 8b). The trick here is guiding the pieces safely. After all, these are fairly large panels to run through on edge, so I added a tall auxiliary fence to the rip fence, which made guiding the panel more secure. Also, when beveling a panel, it's always a good idea to start with the short ends. This way, if there is any chipout, it'll be cleaned up when the bevels are cut on the long edges.

**ATTACH TO CASE.** To attach the top and bottom, I simply glued them to the case with the bevels facing each other. (The overhang should be equal on all four sides.) But go easy on the glue here. Use too much, and the panel won't want to stay in place when you apply the clamps.

**BASE.** The case (and bottom panel) sits on a 3 1/4"-tall base made up of a *front (F)*, *back (F)*, and *sides (G)*, as shown in Fig. 8. These pieces are mitered on each end, and they're sized so the bottom (E) will overhang the assembled base frame 1/4" on each side (Fig. 10a).

To strengthen the miters, I added a hardboard spline to each corner. This means cutting a kerf in the ends of each base piece, as shown in Fig. 9. But instead of centering the kerfs, I cut them closer to the inside corners of the miters (Fig. 9a). This lets me add a little larger spline without weakening the tip of the miter.

Before gluing up the base, I cut a gentle curve on the base front and back. To lay it out, I used a scrap of 1/8" hardboard, and the curve can be cut quickly with a band saw or sabre saw. A little sanding, and the frame is ready for assembly.

Finally, to attach the assembled frame to the case, I glued two *cleats (H)* to the frame and then screwed through them into the bottom panel and case (Figs. 10 and 10a).

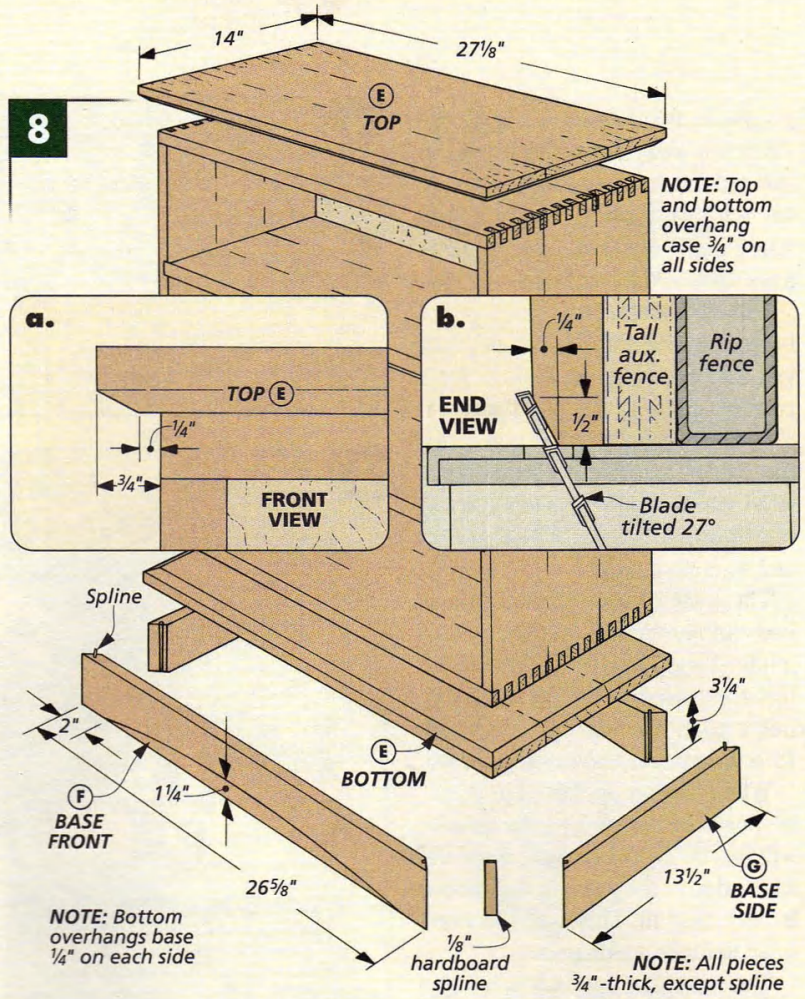


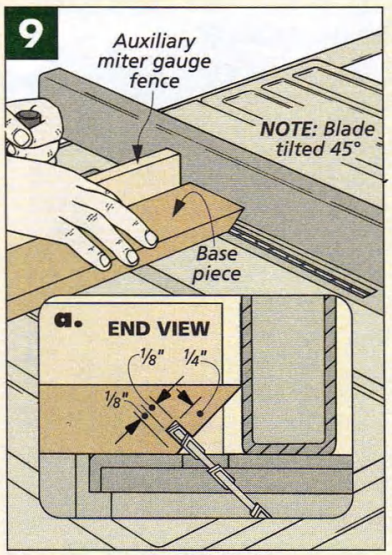


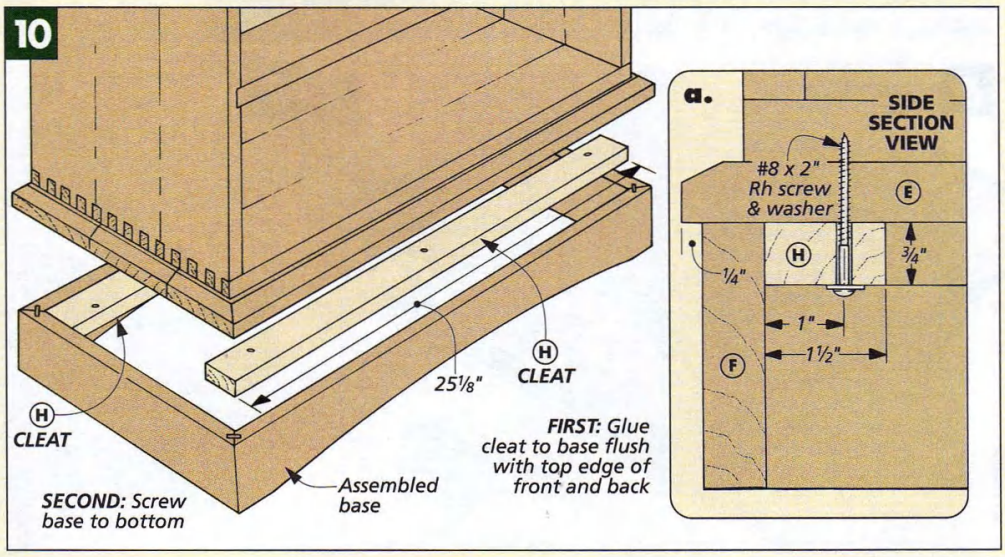

## Drawers

All that's left to build are some drawers. What size and how many is up to you. There's a lot of flexibility here. Also, if you want to create handle cutouts instead of adding pulls, you'll want to do the work *before* you assemble the drawers. (See the box below.)

The drawers simply sit in the case and can be pulled out completely. To keep the math easy, they're either 6", 12", or 24" wide, which means each *row* of drawers has 1/8" total for the gaps between the drawers.

**CUT TO SIZE.** Regardless of their width, all the drawers are built the same way. The 1/2"-thick *fronts (I, J, K), backs (I, J, K),* and *sides (L)* all start out slightly oversized, just like the case pieces did. (Fig. 11 shows finished dimensions.)

**BOX JOINTS.** The spacing of the box joints here is the same as the case. So you can use the box joint jig you made earlier (refer to Fig. 2 on page 22). But these box joints are only 1/2" long (instead of 3/4"). So to reduce the chipout, I backed up the cuts by gluing a scrap plug into the notch in the fence. Then I recut the notch with the blade raised to 1/2".

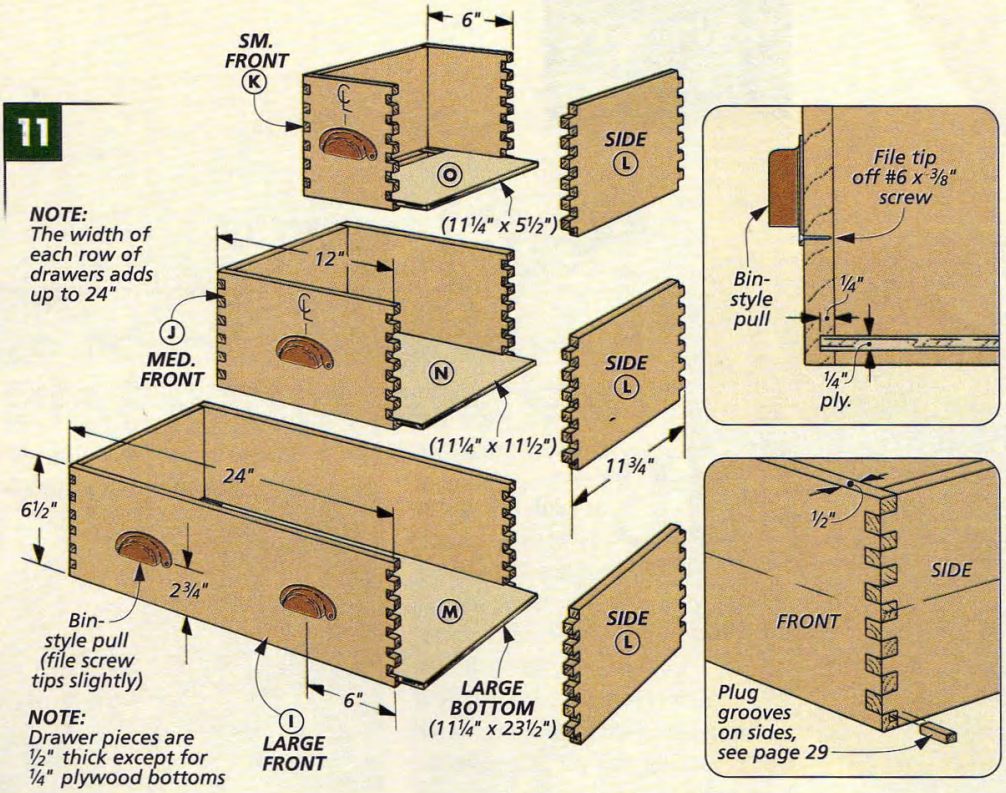


I also fine tuned the jig so the box joints fit a bit tighter (refer to the box on page 27). That's because the drawers aren't going to be as challenging to assemble as the case.

Also, when cutting the box joints, you'll want to start with the front and back pieces so the plugs end up on the drawer sides (Fig. 11b).

**BOTTOMS.** Next, the *bottoms (M, N, O)* can be added. For these drawers, the grooves should be cut flush with the bottom pin on the fronts.

With all the drawers assembled, I plugged the grooves (Fig. 11b). Then I applied several coats of finish. When it's dry, all that's left is to add the pulls (Fig. 11a).

## DESIGN OPTIONS

While working out the design of this storage chest, a couple interesting options came up that you might want to consider.

**MOBILE CHEST.** The first option is to make the case mobile by adding casters, as you can see in the photo at right and center drawing below. This means you don't have to build the top or the base. But you will need to plug the grooves for the back that are exposed on the top of the case, as shown in the left drawing. (For more on this, refer to page 29.)

**HANDLE "CUTOUTS."** Another option is to build the drawers with cutouts instead of adding metal drawer pulls, as in the right drawing below. These cutouts couldn't be more simple. *Before* assembling the drawer, drill two 1"-dia. holes and remove the waste with a band saw or sabre saw. Then sand the cutout smooth.

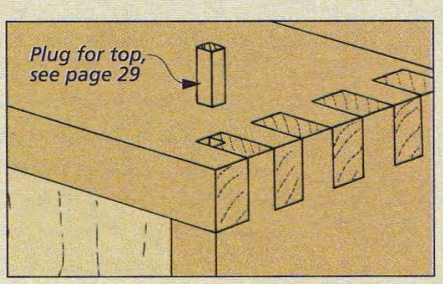


***Case without top or base.*** *This storage chest can be built without adding the top or base. Just plug the holes in the top.*

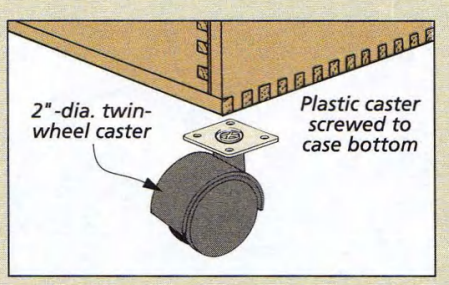


***Mobile chest.*** *For a mobile chest, you can buy casters and screw them to the case. (Locking casters are also available.)*

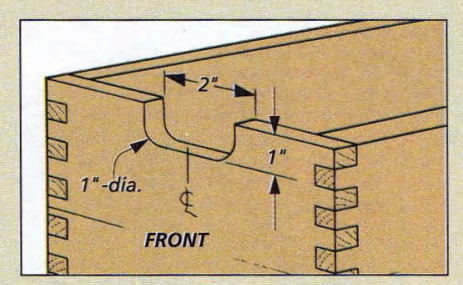


***Handle cutouts.*** *Instead of traditional pulls, you can cut openings on the front pieces before assembling the drawers.*

# BOX JOINTS

*Box joints have it all — they're strong, quick, and good-looking. And all you need is a dado blade and a "ten-minute" jig.*

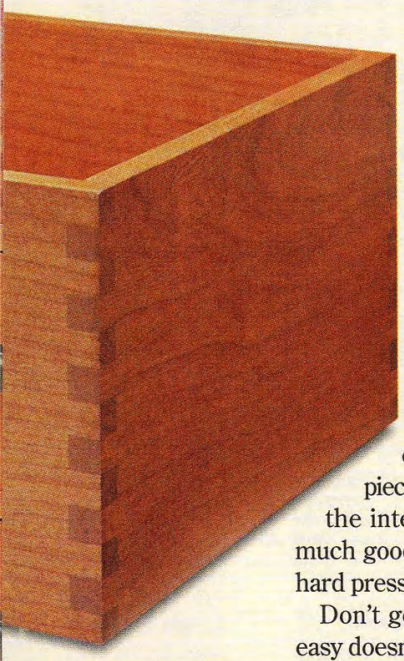

▲ *Interlocking pins create a lot of gluing surface for a really strong and attractive joint.*

Box joints are strictly "power tool" work. You don't need hand saws or chisels. That means they're quick and easy to cut — as easy as pushing a piece across the table saw. And the interlocking pins create so much good gluing surface you'd be hard pressed to break the joint.

Don't get me wrong. Quick and easy doesn't mean sloppy. Box joints have to fit well for the glue to work. That's why I rely on a shop-made jig. With a careful setup, this jig works with assembly-line consistency.

Another nice thing about box joints is their flexibility. They can be as wide or narrow as the dado set you use to cut them. (A stacked set works best.) Their length (set by the height of the blade) will always match the thickness of the stock.

**JIG.** The box joint jig I use has just three parts: two fences that attach to the miter gauge and a small hardwood key, as shown in Fig. 1.

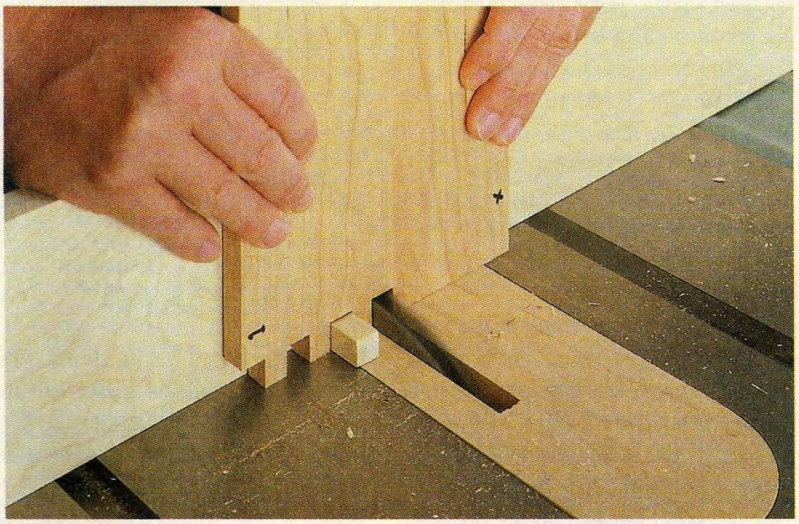

**FRONT FENCE.** Of the two fences, the one in front provides the support. How big should it be? It depends on the size of the workpieces. I make sure the fence is at least twice as long as the pieces are wide. (And with large panels, making the fence taller is also a good idea.)

**BACK FENCE.** The fence in back is a mounting board for the front fence (Figs. 1 and 1a), so its size isn't too important. What *is* important is to drill oversize shank holes when screwing the fences together. This creates a little "play" so you can micro-adjust the front fence later on.

**KEY.** Finally, there's a hardwood key that's glued into the front fence (*not* the back fence). The nice thing about this key is that once the jig is set up and fine-tuned, cutting the box joints is almost automatic.

**MAKING THE JIG.** Now that you've got the basic idea, take a few minutes to build the jig following Steps 1-5 on the next page. And if you're wondering why the notch (and key) are set *below* the thickness of the stock (Step 1), the explanation is pretty simple. You don't want the key to prevent the ends of the pieces from seating fully on the table.

**SETUP.** After the jig has been built, it can be set up to cut the box joints. All there is to this is getting the key in the right place. That's because the position of the key determines the width of the pins. So all you have to do is

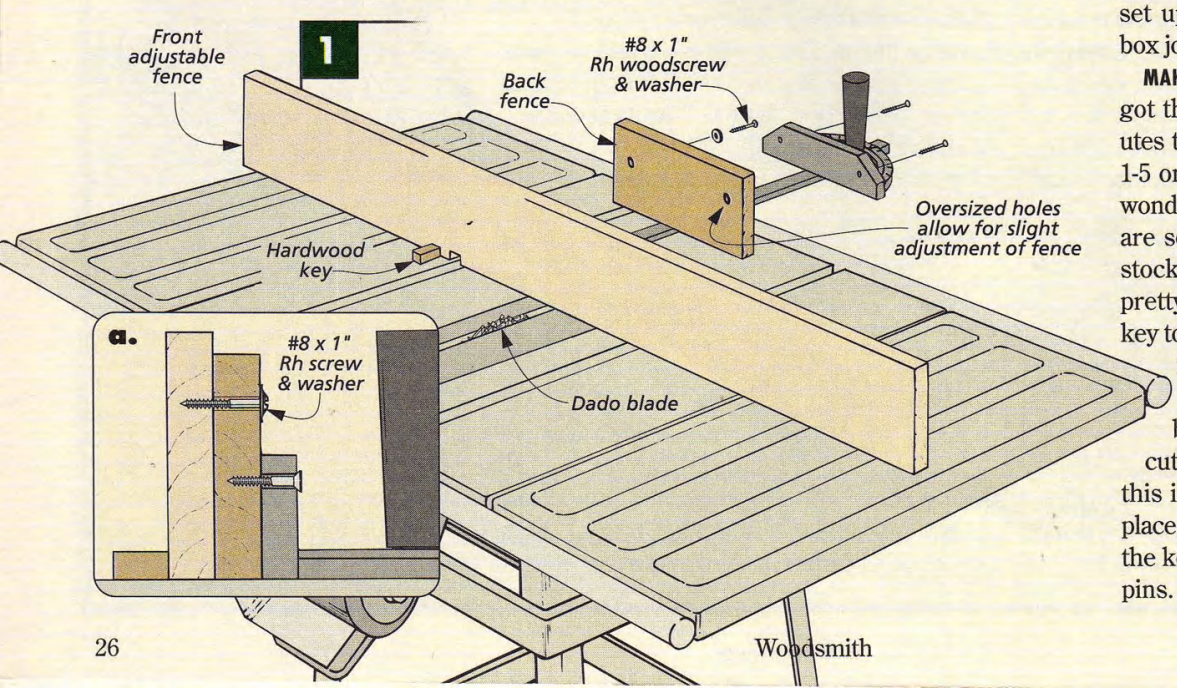

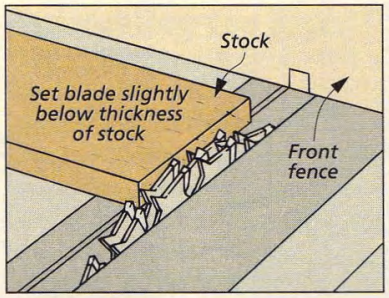


**1** *With the fences screwed to the miter gauge, set the dado blade slightly below the thickness of the stock. Then cut a notch in the jig.*

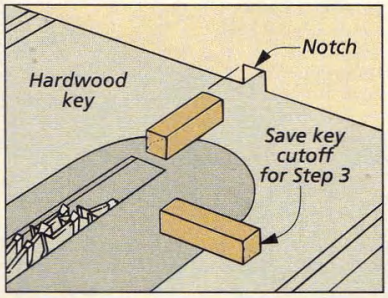


**2** *Now cut a hardwood key that fits snug in the notch. Glue this key into the front fence and relieve the top edges with sandpaper.*

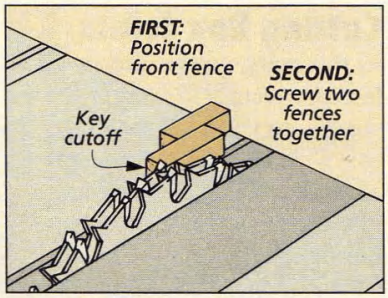


**3** *For the initial setup, unscrew the front fence and position the key with one of its cutoff pieces. Re-attach the fence and set the blade height.*

unscrew the front fence and shift it over "one key" to the right (Step 3).

When testing the setup (Steps 4 and 5), make sure the test pieces are the same thickness *and* at least as wide as the workpieces. If not, even though your test pieces fit perfectly, the workpieces may not.

Just how tight should the fit be? It depends on the workpieces. I usually fine tune the jig so the pieces have to be tapped together *lightly* with a mallet. Any tighter, and you'll have problems when the glue is added.

However, for large, wide panels, I like to be able to dry assemble them with just hand pressure (I still have clamps on hand for when the glue is added). This way, the assembly goes a little more smoothly.

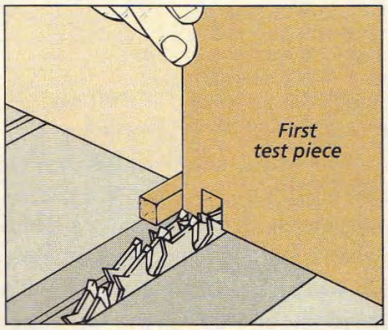


**4** *Holding a test piece tight against the key, make a pass. Then fit this slot over the key and make another pass. Continue across the workpiece.*

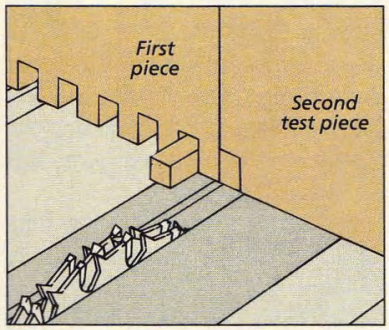


**5** *Flip the first test piece around and set a second test piece against it. Cut the slot, remove the first piece and continue with the second piece.*

▲ *When fine-tuning the front fence, I make any micro-adjustments "visible" by drawing a line across the two fences.*

When fine tuning, you'll also set the length of the pins by raising or lowering the blade (see box). I like the pins to stick proud just a hair ($^1/_{32}$" or less). This way, all I have to do after assembly is sand the pins — not the entire face of each piece.

Once the test pieces fit well, the "tricky" part is over — now you can get started on the good workpieces.

## FINE-TUNING THE FIT

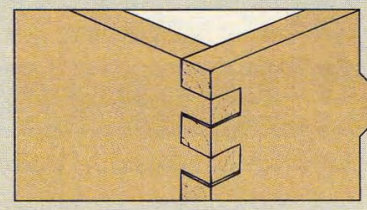

***Loose fit***. *If there is a gap between the pins, nudge the key away from the saw blade slightly.*

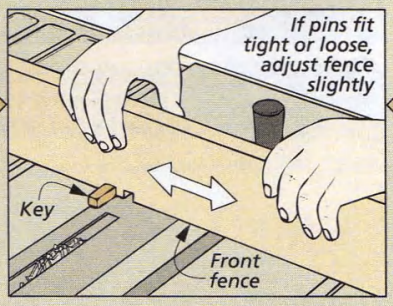


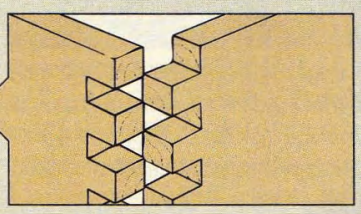

***Tight fit***. *If the pins won't fit into the slots at all, then nudge the key towards the saw blade.*

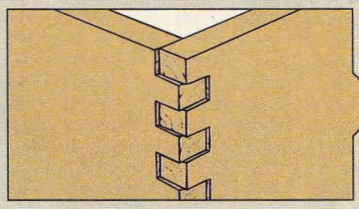

***Short pins***. *If the blade is set too low, the pins will be short. So simply raise the blade slightly.*

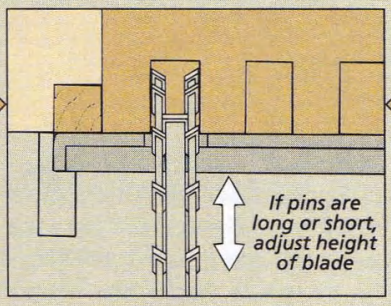


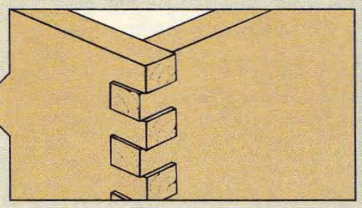

***Long Pins***. *If the pins stand proud more than $^1/_{32}$", the saw blade needs to be lowered.*

## Cutting Box Joints

At this point, you've already cut at least one set of box joints (on the test pieces), so you know just how easy it is. Now it's time to get started on the actual workpieces.

**BOX JOINT PRECISION.** But first, there's a little secret I should let you in on. Box joints aren't as precise as they look. For instance, say you're cutting ½" box joints for a drawer, as shown in the drawing at right. These box joints won't be exactly 0.5" — they may be 0.49", 0.51" or 0.52" (It depends mostly on the width of your dado blade.) This may sound like hair splitting, but after cutting the thirteen or so slots and pins, this .01" starts to add up.

**EXTRA WIDE PIECES.** Don't worry, the solution isn't to get out a set of calipers. What I do is build in a "fudge factor" by cutting the pieces extra wide. Then after the box joints are cut, I trim them so there's a full slot or pin on each edge. The workpieces probably won't end up their intended width in the end, but no one (besides you) will know.

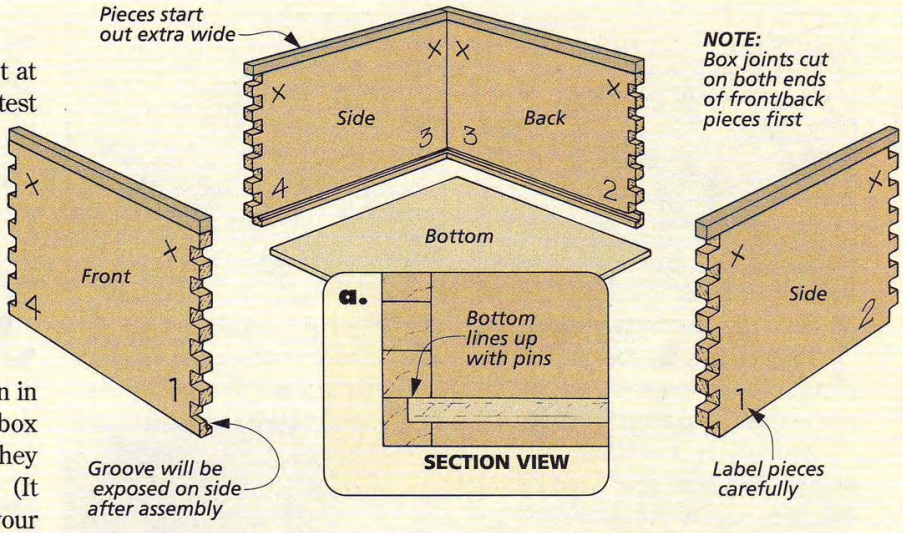


And what about drawers that *have* to fit a particular opening? I still start with oversize pieces. Then when trimming them down, I simply do what looks best. Sometimes it's trimming a little off the top edge. Other times I take a little off both the top and bottom of the pieces.

**LABEL PIECES.** Before you begin cutting the box joints, it's also a good idea to label the pieces. I orient them the way they'll be assembled and number the corners along the bottom (or back) edge. This will be the leading edge — the one set against the key for the first pass.

**CUT JOINTS.** Now you can begin cutting the box joints, as shown in the steps below. I focus on keeping the pieces held tight to the jig and pressed down flush to the table. But as I've said, this is almost automatic.

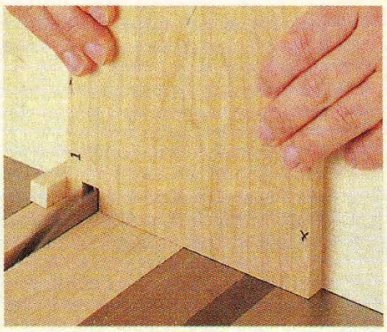

**1** *Begin with the front piece (one that starts with a pin). Set its bottom edge against the key and hold it tight as you pass it over the blade.*

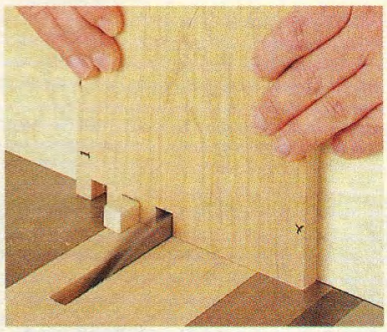

**2** *Now lift the piece and straddle the first slot over the key and take another pass. Repeat this process across the entire end of the piece.*

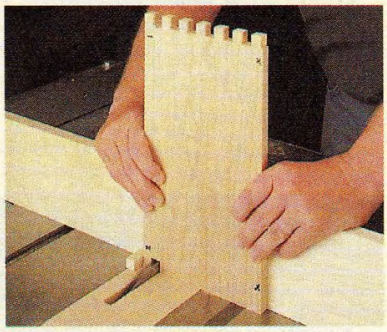

**3** *Flip the piece end-for-end, keeping the bottom edge against the key. Then cut the slots on this end. Repeat this on the other "pin" piece.*

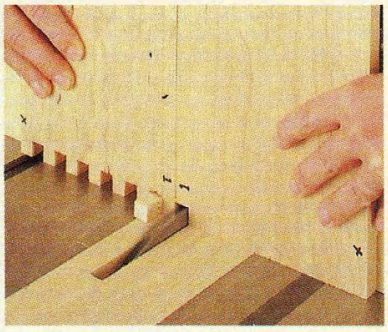

**4** *To cut the sides (that begin with a slot), straddle the mating "pin" piece over the key. Then butt the side against it and cut the first slot.*

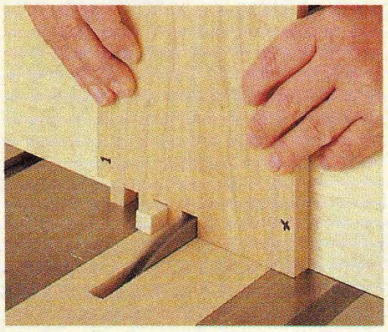

**5** *Now remove the "pin" piece and continue cutting the slots across this workpiece. Repeat this process on all the mating corner pieces.*

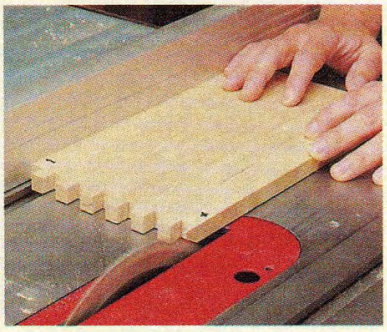

**6** *After cutting the box joints on all four corners, set the rip fence to trim the top edge of each workpiece to leave a full pin or slot.*

## Assembling the Box

With all the box joints cut, the last thing to do is glue the workpieces together. But before getting out the glue and clamps, you'll want to take care of the groove for the bottom or back of the box, as well as any other joinery that needs to be cut.

**GROOVES FOR BOTTOM/BACK.** As you might expect, cutting the grooves for a drawer bottom or case back is pretty straightforward. I like to do this on the table saw, as shown in Fig. 1 at right. This way, I can size the groove so the bottom or back (usually ¼" plywood) fits perfectly. But keep in mind that these grooves will be exposed after assembly.

Sometimes the exposed grooves will be covered with a panel, as they were on the cases of the storage chest and clock. But it's not a big job if the holes do need to be plugged, as they will with most drawers. (The box below shows you how.)

**ASSEMBLING BOX JOINTS.** When all the joinery is completed and the bottom (or back) has been cut to fit in the grooves, the workpieces are ready to be put together. But with box joint assemblies, there are a couple of challenges you should be aware of.

First, to get the glue in the slots on both ends of each piece and then get the pieces clamped together, you have to move quickly. And the larger or more complicated the assembly is, the faster you have to move. But don't let this scare you.

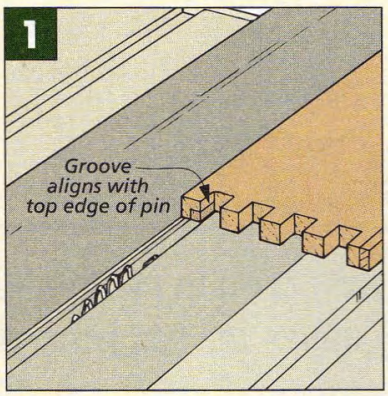


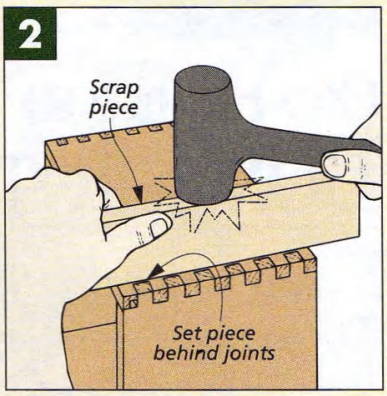


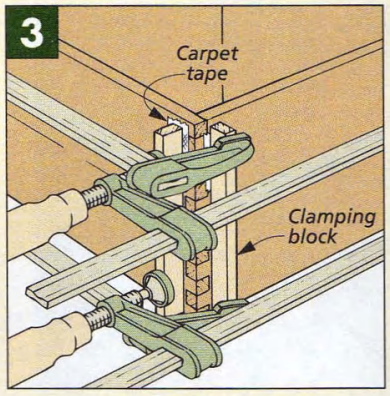

You can anticipate any problems by making several "dry runs." Plus, using a slow-setting glue (like liquid hide glue) will buy you a little more working time. I also keep a small brush handy, which lets me spread the glue on more quickly.

The second challenge is pulling the corners tight. Each corner has to be squeezed in two directions. This can mean quite a few clamps, but they're not the first tool I pick up. Instead, each corner is assembled with a mallet and a scrap piece that's set just behind the box joints (since the pins were cut to stand proud), as shown in Fig. 2.

With one corner together, I move to the next, working my way around the case until all the workpieces are assembled (including the bottom). I won't have picked up a clamp yet, and sometimes I don't have to. The joints are tight enough that they're held together by friction. But often there are small gaps, which is when the clamps come in handy.

Two cautions, however. As when using a mallet, you can't put the pressure right on the joint. So again I use scrap blocks, carpet taping them next to the box joints (Fig. 3).

Second, you want to careful about applying too much clamping pressure. With the clamps set beside the box joints, they can easily force the sides of the assembly to bow in.

**SAND PINS.** After the glue is dry, all that's left is to sand the pins. With small boxes, I find it easier to keep from rounding over the corners if I set a couple pieces of adhesive-backed sandpaper on a flat surface and sand the box lightly until the pins are flush, as in Fig. 4. W

### PLUGGING THE GROOVE

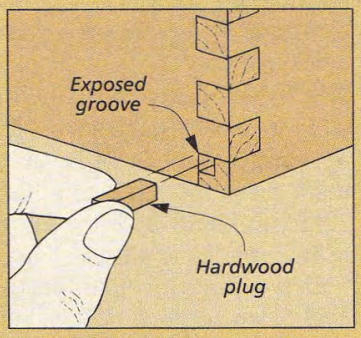


***To plug the hole**, start by cutting an extra-long plug. Taper the sides slightly to get a snug fit and then glue the plug in place.*

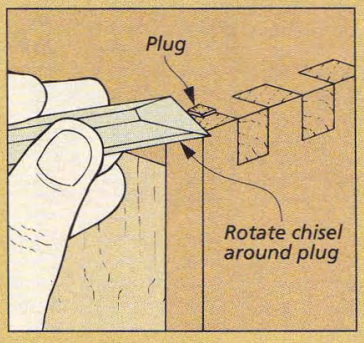


***To trim the plug**, use a chisel to pare off the excess by working around the plug towards the center. Then sand it smooth.*

# OLD-FASHIONED BOX JOINT CLOCK

*Looking for a project you can build in no time? This clock is the answer. The secret — a simple jig makes the box joints go like clockwork.*

For me, one of the biggest frustrations with woodworking is time — there never seems to be enough of it. This clock is an exception. It's a weekend project from beginning to end.

**BOX JOINTS.** Now, I know it *seems* like cutting tight, consistent box joints would be time-consuming. And they must require a great deal of skill and experience, right?

Wrong. The truth is that with the help of a simple jig, cutting box joints is almost automatic. And by "simple," I mean a couple of scrap pieces that can be screwed together in minutes. Spend a few more minutes fine-tuning the jig, and you'll be ready to cut the box joints.

**CLOCK MOVEMENT.** Besides the box joints, the other striking part of this project — the clock — will take even less time. It's an inexpensive quartz movement that's commonly available from woodworking and clock catalogs. (For sources, turn to page 35.) To install the movement, a hole is drilled in a mounting board, and then after the case has been assembled, the clock is pressed into this hole. It's that simple.

**FINISH.** Even finishing this clock is quick and easy. To help the maple look "aged," I used an off-the-shelf oil stain (Honey Maple) and wiped on a few coats of an oil finish. But don't get in too much of a hurry. Letting the finish dry is the one part of this project that will take time.

So if you've got a "free" weekend coming up, why not plan on building this small clock? I can promise you a couple big payoffs: You'll get a chance to try your hand at a classic woodworking technique. Plus, you will end up with a timeless project.

# Construction Details

***OVERALL DIMENSIONS:***
***12⅛"H x 6¼"W x 5"D***

**CROSS SECTION**

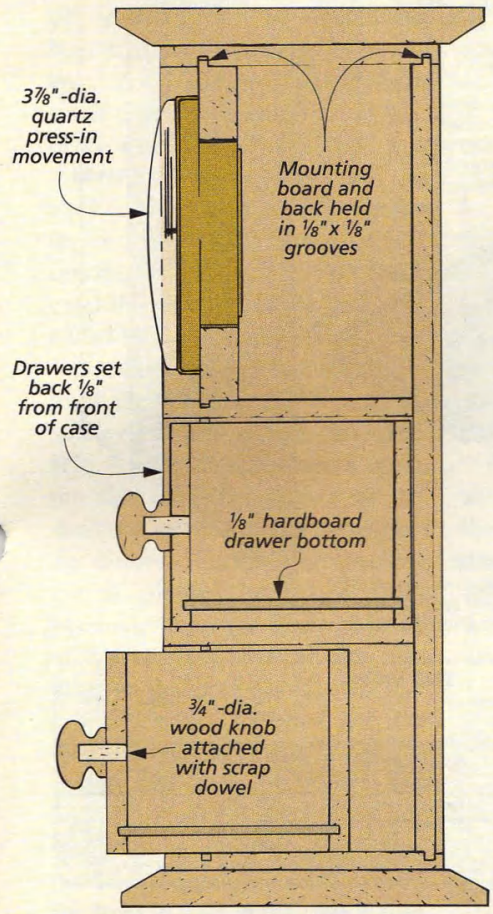


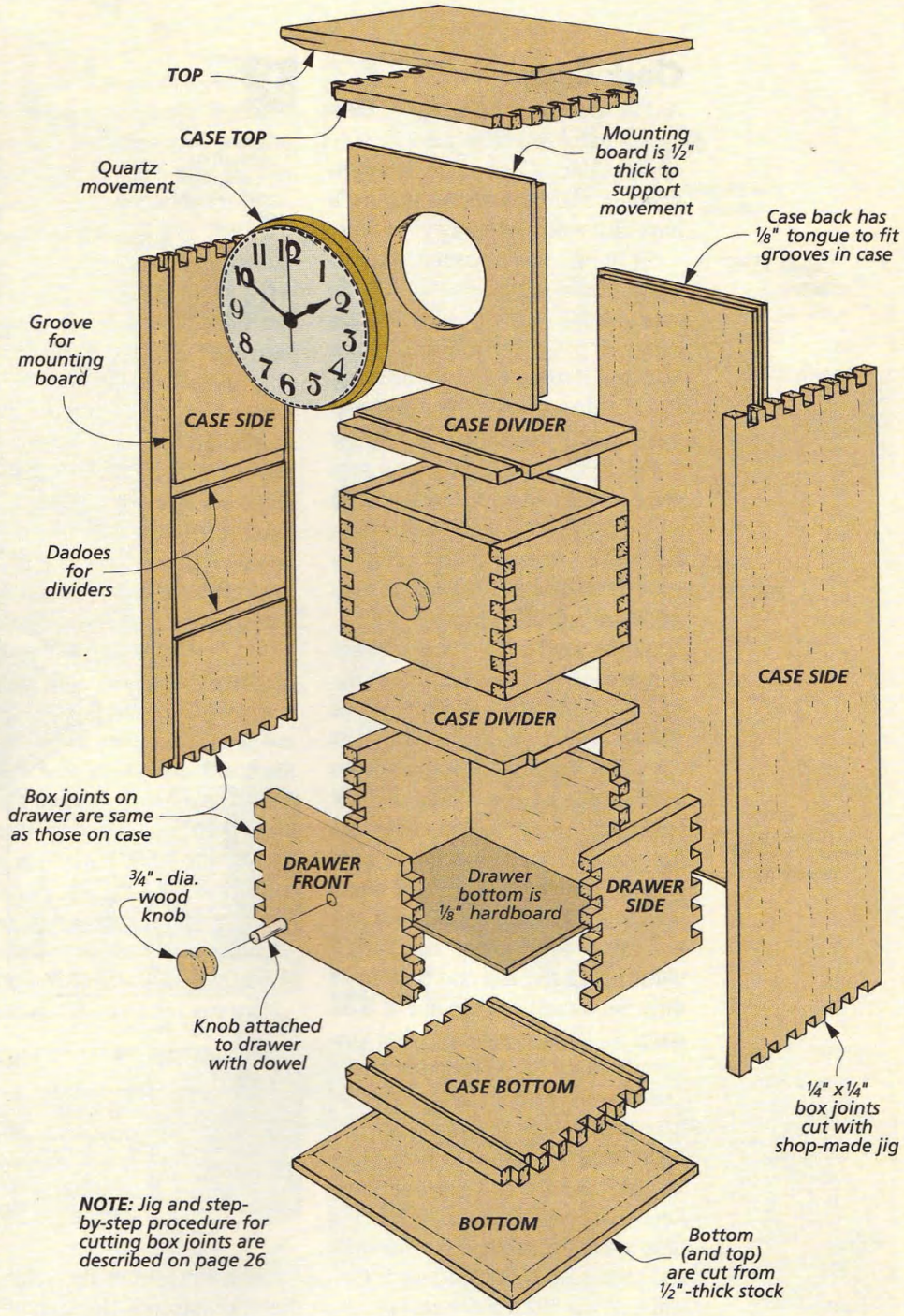


***NOTE:*** *Jig and step-by-step procedure for cutting box joints are described on page 26*

## MATERIALS & SUPPLIES

| | | |
|---|---|---|
| **A** | Case Sides (2) | ¼ x 3¾ - 11⅛ |
| **B** | Case Top/Btm. (2) | ¼ x 3¾ - 5 |
| **C** | Case Back (1) | ¼ x 4 11/16 - 10 13/16 |
| **D** | Case Dividers (2) | ¼ x 3⅜ - 4¾ |
| **E** | Mounting Board (1) | ½ x 4 11/16 - 4 11/16 |
| **F** | Top/Btm. (2) | ½ x 5 - 6¼ |
| **G** | Drawer Fr./Bk. (4) | ¼ x 2¾ - 4½ |
| **H** | Drawer Sides (4) | ¼ x 2¾ - 3¼ |
| **I** | Drawer Btm. (2) | ⅛ hdbd. - 3 x 4¼ |

- (1) 3⅞"-dia. Quartz Movement
- (2) ¾"-dia. Wood Knobs

## CUTTING DIAGRAM

*¼" x 5½" - 48" Maple (1.8 Sq. Ft.)*

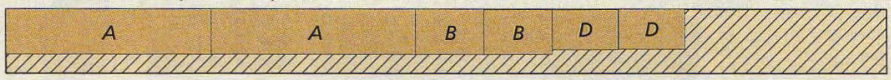


*¼" x 6" - 36" Maple (1.5 Sq. Ft.)*

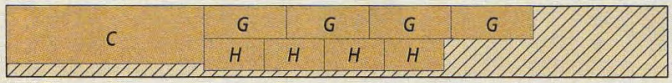


*½" x 5½" - 24" Maple (.9 Sq. Ft.)*

***ALSO NEEDED:*** *Two small (3" x 4¼") pieces of ⅛" hardboard for drawer bottoms*

## Clock Case

As I've already mentioned, this case is built with box joints, and they only *appear* difficult. You can build a jig in minutes, and once it's set up, you'll have all the box joints cut in no time.

**CUT TO SIZE.** Before cutting the box joints, however, you need to cut the case pieces to *working* size. The finished sizes for the *sides (A)*, *top (B)*, and *bottom (B)* are shown in Fig. 1. But to start with, I ripped them slightly wider, as you can see in Fig. 2. This way, you can be sure you'll end up with a full pin (or slot) on both the front and back of the case. (This means your case may not end up exactly 3¾", but nobody will know any difference.)

**CUT BOX JOINTS.** Now you're ready to make the box joint jig and cut the box joints on the case pieces, as shown in Fig. 2. The article that starts on page 26 describes both building the jig and cutting the box joints. All I need to point out is that for this clock, you'll want to start with the sides (A). This way, when you cut the grooves for the back and mounting board later on, they'll show up on the top and bottom of the case, as you can see in Fig. 6 on page 33. This is exactly what you want because the top and bottom of the case will end up being covered later (Fig. 7 on page 34).

**CUT GROOVES.** After the box joints are cut and the workpieces have been trimmed to final width, it's time to cut the grooves for the back and mounting board (the piece that will hold the clock movement).

There isn't anything tricky about these grooves. They're both ⅛" x ⅛" and are cut on all four pieces. But note that the grooves in front are cut further away from the edge than those for the back (Figs. 1 and 1b).

**CUT DADOES.** With the grooves complete, I set the top and bottom aside so that dadoes could be cut in the case sides. These dadoes will trap some case dividers (shown in Fig. 3). But I didn't want them visible from either the front or back of the case after assembly. So these are stopped dadoes — they're cut only between the two grooves you've already cut.

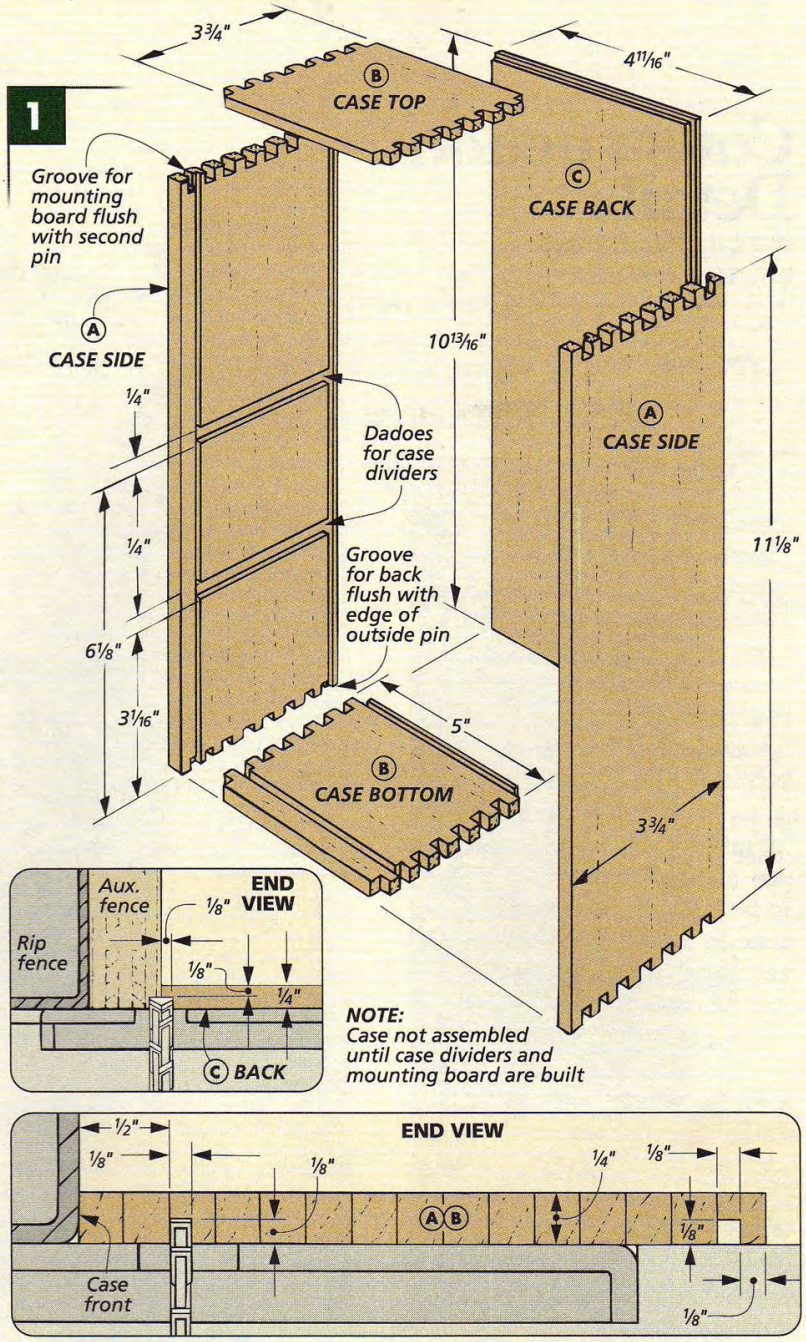


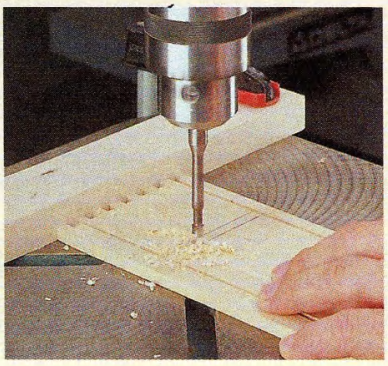

*The stopped grooves in the case sides were roughed out at the drill press and then cleaned up with chisels. See page 18 for step-by-step instructions.* ►

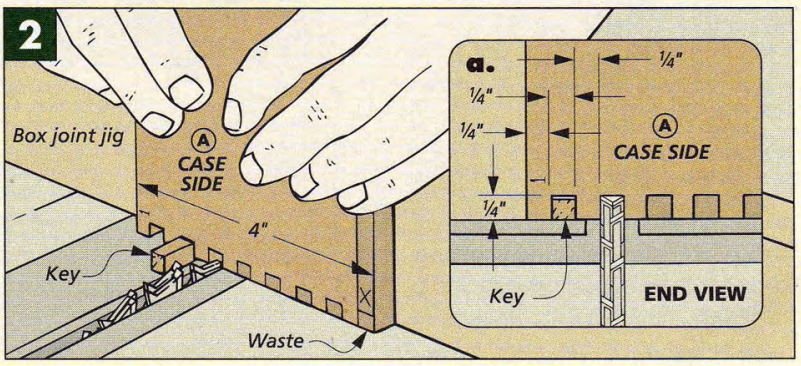

Normally, I cut stopped dadoes on a router table, but it's hard to see what's happening. So this time, I cut the dadoes by drilling overlapping holes on the drill press, as shown in the photo on page 32. (For more on how to do this, refer to page 18.)

**CASE BACK.** With the case pieces complete, I cut a *back (C)* to fit in the grooves in the case (Fig. 1). But to be safe, I didn't cut it to fit tight. (It's 1/16" smaller in both width and height.) Of course, the grooves are only 1/8" wide, so you'll need to cut a small rabbet around the *front* face of the back so it'll fit (Fig. 1a).

**DRAWER DIVIDERS.** Next, you can work on the two *dividers (D)* for the drawers (Fig. 3). These are cut to fit into the stopped dadoes. So I measured the opening of the case and added 1/4" — 1/8" for each dado.

Since the dadoes were stopped in front, the dividers must be notched so they'll fit between the case sides (Fig. 4). You'll want to sneak up on the size of these notches so you don't end up with gaps at the front of the dividers. Fortunately, checking the fit couldn't be easier. I dry assembled the case and test the fit of the notches between the case sides, as shown in Fig. 4b.

When you're satisfied that the dividers will fit well, there's still one more thing to do. Since the upper divider is part of the "frame" that will hold the mounting board, you need to cut a groove that aligns with the front groove in the case pieces, refer to Fig. 1b on page 32.

**MOUNTING BOARD.** The last piece to add is the *mounting board (E)*, as shown in Fig. 3. It's 1/2"-thick to support to the clock movement. And this mounting board is like the back (C): it's 1/16" smaller than the opening created by the grooves *and* its inside face needs to be rabbeted to create a small tongue (Fig. 3a).

To hold the clock, the mounting board requires a fairly large hole. And since all quartz movements aren't identical, be sure to have your clock in hand *before* drilling it.

To drill out the hole, I used a common wing cutter, as shown in Fig. 5. And to keep my fingers clear of the spinning cutter, I secured the small workpiece in the jaws of a handscrew. (If you don't have a wing cutter, you can also drill a starter hole and then cut out the opening with a sabre saw or scroll saw.)

**ASSEMBLE CASE.** Now you're ready to glue the case together. There are a lot of pieces to work with here, but only the box joints and the front ends of the dividers need any glue.

By setting the case on its side, as shown in Fig. 6, I could get most of the pieces in place easily. Except for the lower divider, every piece was supported by at least one other. All that was left then was to glue and fit the second side onto the assembly.

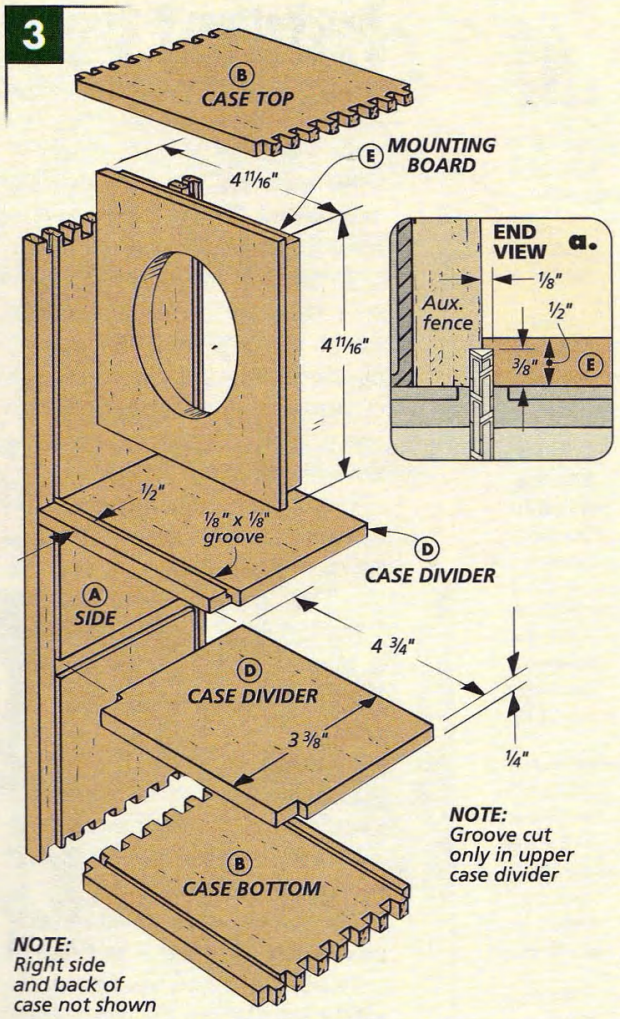


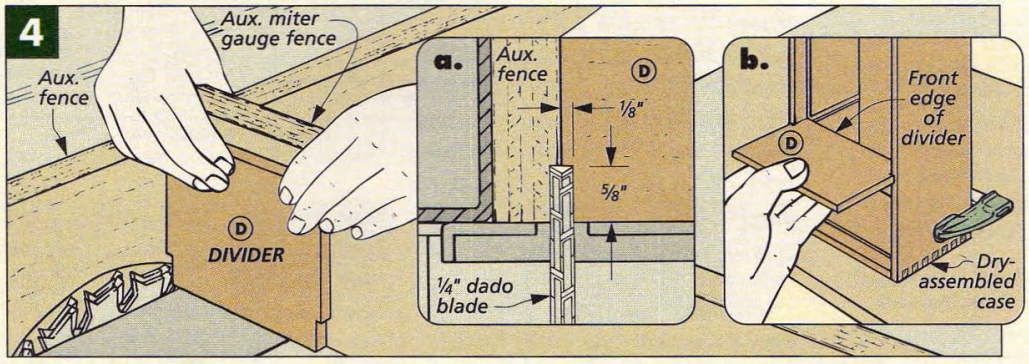


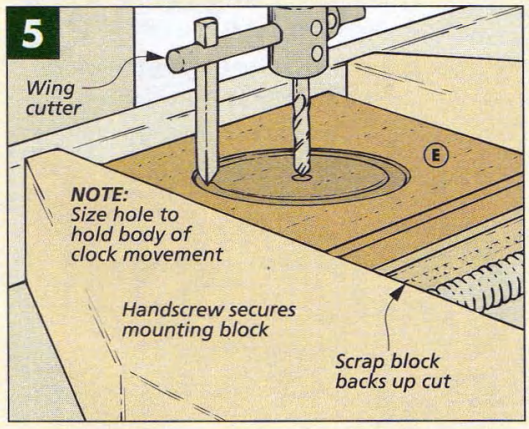


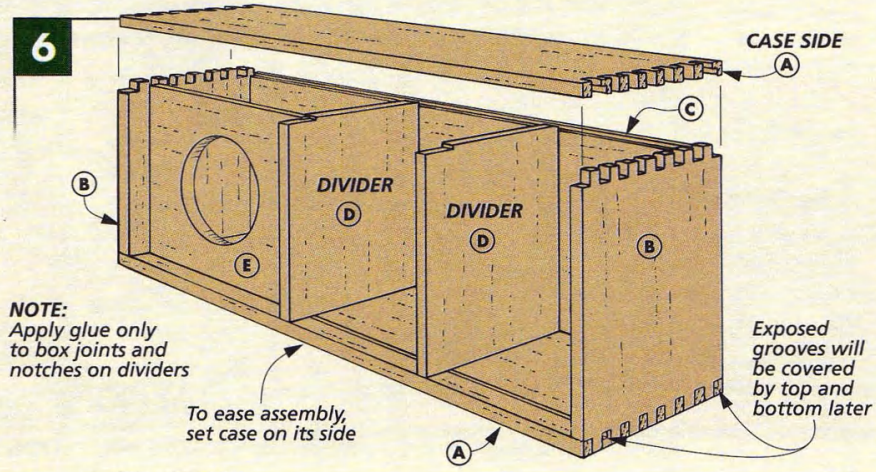

## Top, Bottom & Drawers

With the case glued up, all that's left is to add a top and bottom to the case and build the two drawers (Fig. 7). I started with the top and bottom.

**TOP & BOTTOM.** The ½"-thick *top* and *bottom (F)* are sized to overhang the case ⅝" on all four sides (Fig. 7a). Then the only thing to do with these pieces is bevel their edges (Figs. 8 and 8a). When beveling all four edges of a piece, I always cut across the end grain first. This way if there's chipout, the bevels on the edges should clean it up.

I glued the top and bottom to the case one at a time. The only thing to be careful about here is that the overhang is the same on all sides.

**DRAWERS.** With the top and bottom in place, the drawers can be built from ¼"-thick stock. And like the case, the *front (G)*, *back (G)*, and *sides (H)* start out extra wide at first. (Since the drawers are small, I built them to fit tight from side to side. Then I sanded them until they opened and closed easily.)

The box joints are cut on the side pieces first. This way, the grooves cut for the ⅛" hardboard *bottom (I)* will be exposed on the sides. Then after cutting the box joints, the pieces can be trimmed to size.

This is where the drawers differ from the case. The final width of the case wasn't critical, but the drawer pieces have to fit into the case openings with a 1/16" gap at the top, as shown in Fig. 7b. So you may not end up with a full slot (or pin) at the bottom of the drawer.

**HARDWARE.** After the drawers are glued together, the small holes in the sides can be plugged (see page 29), and a small wood knob can be added to each drawer front. I didn't have a screw small enough for the hole drilled into the back of the knob. (And a screwdriver would've been too long anyway.) But I did dig up a small scrap of dowel to use instead, as shown in Fig. 7.

Clocks don't get much handling, so you don't need to worry about a heavy-duty finish. After staining the wood a honey maple color, I wiped on a few coats of an oil finish. Then when that had dried, I pressed the movement into its opening. W

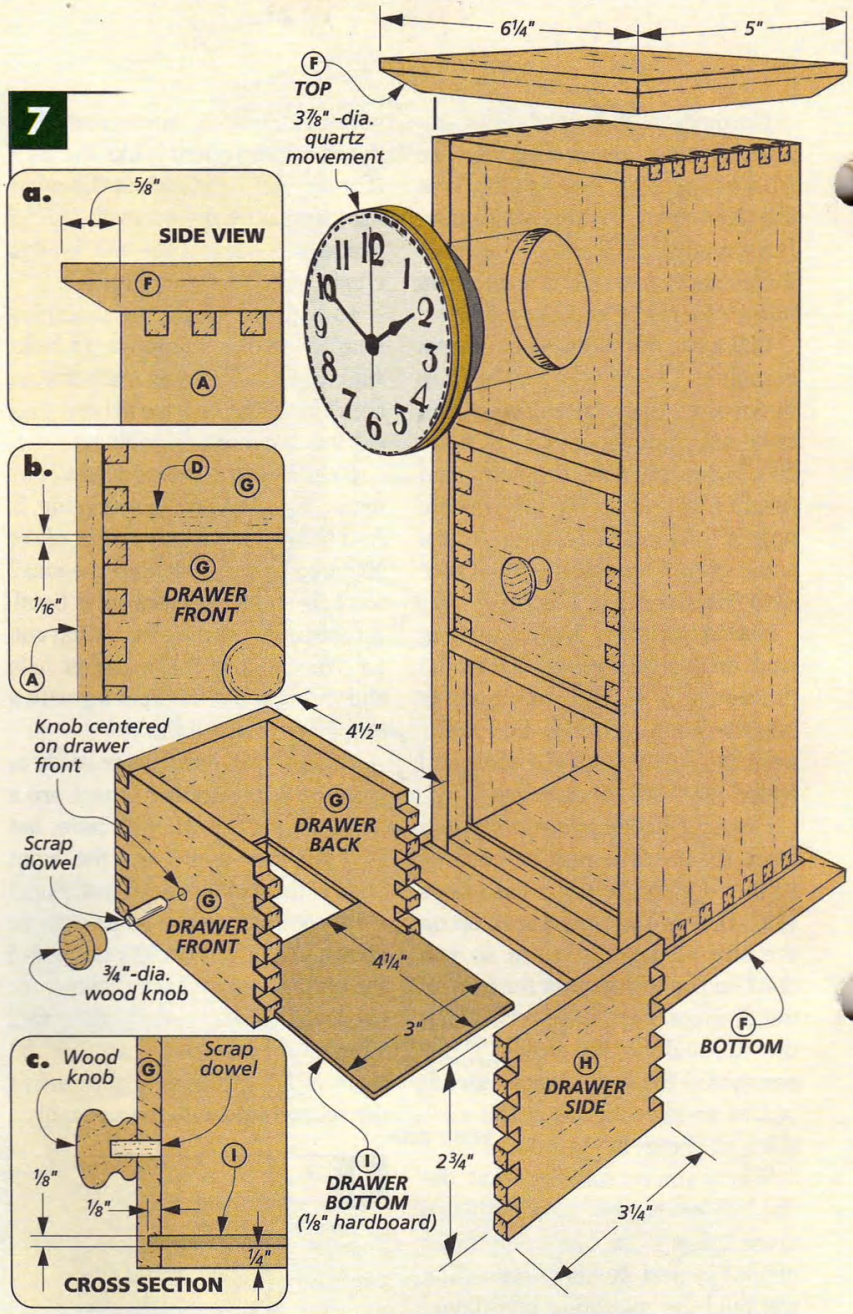


**Sanding Tip.** *If the edges of a drawer aren't flush, apply one or two strips of adhesive-backed sandpaper to a flat surface and sand the drawer.*

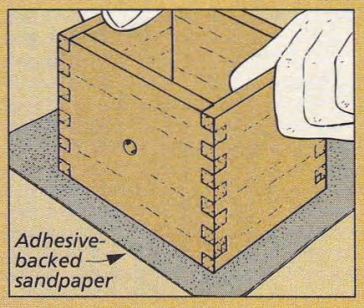


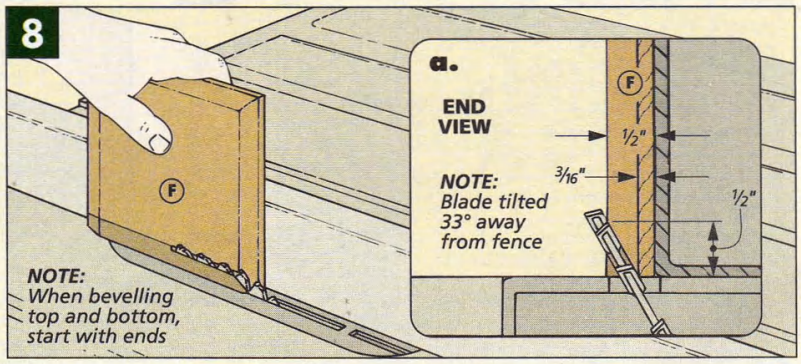

# SOURCES

There's a lot of hardware that goes into the router table in this issue. Most items, like the screws, washers and even the aluminum angle, are available at a home center. Other items, like the plastic knobs, T-track, and insert plate, are only available from woodworking stores and catalogs, see the mail order sources at right. And the Dual Track is an item our "products group" recently developed. (It works so well we just had to use it.)

*Woodsmith Project Supplies* has pulled all the hardware together and is offering three separate kits for the different components of the project. These kits include everything needed to build the project, including aluminum angle, T-track, Dual Track, and a 7¾" x 11¾" phenolic insert. The optional items *not* included are the plastic accessories (see below), the electrical items, and the dust collection hoses and connectors.

▲ *The router table hardware is available in a kit that includes everything you need (except for the electrical supplies, the plastic router bit safety guard and featherboard, and the dust collection supplies).*

**ROUTER FENCE KIT**

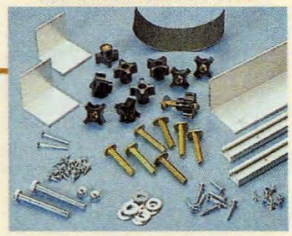

**TOP & CABINET KIT**

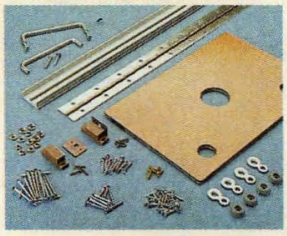

**STAND KIT**

- Fence Hardware Kit
**7131-100** ..... $63.95
- Table Top & Cabinet Hardware Kit
**7131-200** ..... $57.95
- Stand Hardware Kit
**7131-300** ..... $103.95

**BUY COMPLETE KIT & SAVE.** For a limited time, you can buy a complete router hardware kit at a special discounted price and save over $25.

- Complete Router Table Kit
**7131-125** ..... $199.95

**ACCESSORIES.** While you can build a featherboard and router bit safety guard (page 17), the durable plastic ones shown above are also available. Both can be attached with hardware *already* included in the router fence kit (and complete kit).

- Large Featherboard
**4502-526** ..... $18.95
- Router Bit Safety Guard
**4502-206** ..... $15.95

**DUAL & T-TRACKS.** The T-track and Dual Track are also available separately from *Woodsmith Project Supplies*. The T-track provides a quick, secure way to attach accessories to any shop jig or project. While other sources offer similar T-tracks, ours works with both ¼"-20 and 5/16"-18 toilet flange bolts. Our Dual Track (which is not available from other sources) takes this a step further by allowing you to add a perfect-fitting miter gauge slot.

- 32"-long Dual Track
**7213-220** ..... $26.95
- 36"-long T-track
**4502-076** ..... $13.95

**DUST COLLECTION.** To connect the router table to a shop vacuum, we used attachments and hoses from Lee Valley (see list at right). W

## MAIL ORDER SOURCES

*Similar project supplies and hardware may be ordered from the following companies:*

**Klockit**
**800-556-2548**
**www.klockit.com**
*Quartz Clock (3 7/16"-dia.)*

**Lee Valley**
**800-871-8158**
**www.leevalley.com**
*Dust Collection Accessories, T-track*

**Restoration Hardware**
**800-762-1005**
**www.restoration hardware.com**
*Storage chest pulls*

**Rockler Woodworking**
**800-279-4441**
**www.rockler.com**
*Quartz Clock (3½"-dia.), Router Table Hardware, T-track & Inserts, Dust Collection Accessories, Casters*

**S. LaRose**
**888-752-7673**
**www.slarose.com**
*Quartz Clock (3⅞"-dia.)*

**Woodcraft**
**800-225-1153**
**www.woodcraft.com**
*Quartz Clock (3⅞"-dia.), Router Table Hardware, Inserts, Dust Collection Accessories, Casters*

**Woodworker's Supply**
**800-645-9292**
*Quartz Clock (3½"-dia.), Router Table Hardware, T-track & Inserts, Dust Collection Accessories, Casters*

## WOODSMITH PROJECT SUPPLIES

To order a hardware kit from *Woodsmith Project Supplies*, please use our Toll Free order line, see below. It's open Monday through Friday, from 8 AM to 5 PM Central Time. Before calling, please have your VISA, MasterCard, or Discover Card ready.

If you want to mail in your order, call the number below for more information concerning shipping charges as well as any applicable sales tax.

**1-800-444-7527**

**When ordering, please use Key W131**

*Note: Prices subject to change after December 2000.*


**Woodsmith** *on the web*

- Over 100 Woodworking Tips Online
- Visit Our Readers' Project Photo Gallery
- Project Plans You Can Download
- Catalog of Project Kits, Tools, Jigs & Plans
- Forums for Woodworking, Tools & Classifieds
- Links to Other Woodworking Sites
- Order *Woodsmith/ShopNotes* Back Issues

**www.woodsmith.com**

**New Online Customer Service**
Click on Subscriber Services at
***www.woodsmith.com***

- Access your account status
- Find out if your payment has been received
- Change your mailing or email address
- Tell us if you've missed an issue

A LAST LOOK

# FINAL DETAILS

▲ **Router Table.** *With portability and storage designed into one package, this may be the last router table you'll ever need to build. Easy-to-follow directions for this project can be found on page 6.*

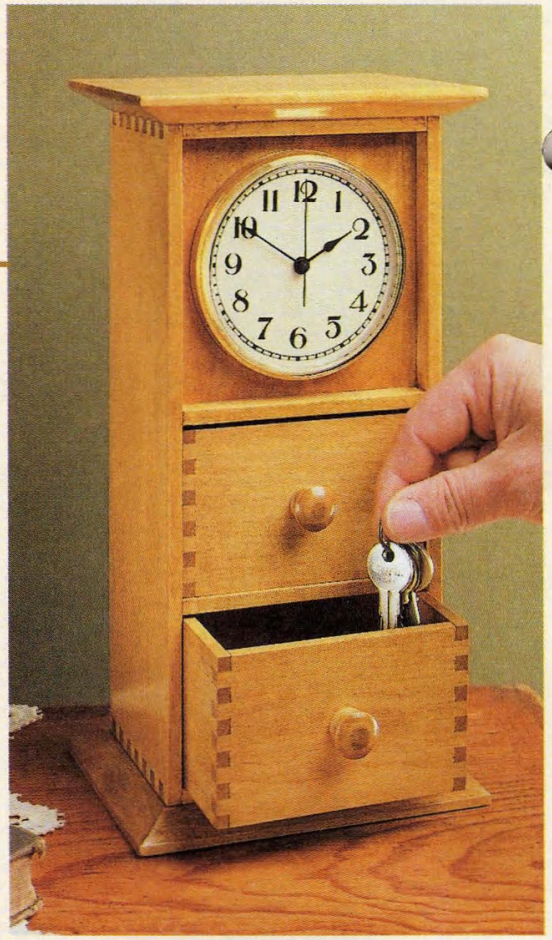

▲ **Box Joint Clock.** *With its eye-catching box joint drawers, this little, old-fashioned clock will look at home just about anywhere. Plans begin on page 30.*

**Box Joint Storage Chest.** ► *Build this cabinet your way... choose from traditional or mobile, drawer pulls or handle cut-outs. Plus you decide the configuration of the drawers. Step-by-step instructions begin on page 20.*